ARIB STD-T64-C.S0036-A v1.0

Recommended Minimum Performance Standard for Mobile Stations with Position Service

Refer to "Industrial Property Rights (IPR)" in the preface of ARIB STD-T64 for Related Industrial Property Rights. Refer to "Notice" in the preface of ARIB STD-T64 for Copyrights

Original Specification

This standard, ARIB STD-T64-C.S0036-A v1.0, was prepared by 3GPP2-WG of Association of Radio Industries and Businesses (ARIB) based upon the 3GPP2 specification, C.S0036-A v1.0.

Modification to the original specification

None.

Notes

None.

3GPP2 C.S0036-A

Version 1.0

Date: October 2011

Recommended Minimum Performance Standard for Mobile Stations with Position Service

© 2011 3GPP2

3GPP2 and its Organizational Partners claim copyright in this document and individual Organizational Partners may copyright and issue documents or standards publications in individual Organizational Partner's name based on this document. Requests for reproduction of this document should be directed to the 3GPP2 Secretariat at secretariat@3gpp2.org. Requests to reproduce individual Organizational Partner's documents should be directed to that Organizational Partner. See www.3gpp2.org for more information.

Revision History

Revision	**Description Of Changes**	**Date**
Rev 0 v1.0	Initial Publication	March 2002
Rev 0 v2.0	bug fix	June 2010
Rev A v1.0	New test cases added	July 2011
Rev A v1.0	Republication text	October 2011

CONTENTS

1 1 INTRODUCTION 1-1
2 1.1 Scope 1-1
3 1.2 Terms and Definitions 1-2
4 1.3 General Test Procedures 1-10
5 1.4 Test Modes 1-10
6 1.5 Tolerances 1-11
7 1.5.1 CDMA System Parameter Tolerances 1-11
8 1.5.2 Measurement Tolerances 1-11
9 1.6 Measurement Data Evaluation 1-11
10 1.6.1 Evaluation of the Measurement Yield 1-15
11 1.6.2 Evaluation of the returned parameters 1-16
12 1.6.2.1 Evaluation with σ_1, σ_2 and σ_1, $\sigma_{80\%}$ Type Tests 1-17
13 1.6.2.1.1 Error Calculation 1-18
14 1.6.2.1.1.1 Calculation of Absolute Satellite Code Phase Error 1-20
15 1.6.2.1.1.2 Calculation of Relative Satellite Code Phase Error 1-22
16 1.6.2.1.1.3 Calculation of Pseudo Doppler Error 1-22
17 1.6.2.1.1.4 Calculation of Signal-to-Noise Ratio and Signal Strength Errors 1-22
18 1.6.2.1.1.5 Calculation of Pilot Phase Error 1-22
19 1.6.2.1.1.6 Calculation of Horizontal Position Error 1-23
20 1.6.2.2 Evaluation of the Returned RMS Error Estimates 1-23
21 2 GPS MINIMUM SPECIFICATIONS 2-1
22 2.1 GPS Performance Specifications 2-1
23 2.1.1 Stationary Location Tests 2-1
24 2.1.1.1 GPS Accuracy Test 2-1
25 2.1.1.1.1 Definition 2-1
26 2.1.1.1.2 Method of Measurement 2-2
27 2.1.1.1.3 Minimum Specification 2-2
28 2.1.1.2 GPS Dynamic Range Test 2-3
29 2.1.1.2.1 Definition 2-3
30 2.1.1.2.2 Method of Measurement 2-4

CONTENTS

2.1.1.2.3 Minimum Specification 2-5
2.1.1.3 GPS Sensitivity Test 2-5
2.1.1.3.1 Definition 2-5
2.1.1.3.2 Method of Measurement 2-6
2.1.1.3.3 Minimum Specification 2-6
2.1.1.4 GPS Multipath Accuracy Test 2-7
2.1.1.4.1 Definition 2-7
2.1.1.4.2 Method of Measurement 2-8
2.1.1.4.3 Minimum Specification 2-8
2.1.2 Moving Scenario Test 2-9
2.1.2.1 Moving Scenario GPS Accuracy Test 2-9
2.1.2.1.1 Definition 2-9
2.1.2.1.2 Method of Measurement 2-10
2.1.2.1.3 Minimum Specification 2-10
2.2 GPS Protocol Tests 2-11
2.2.1 GPS Position Location Session on the Paging Channel Test 2-11
2.2.1.1 Definition 2-11
2.2.1.2 Method of Measurement 2-11
2.2.1.3 Minimum Specification 2-12
2.2.2 Mobile Station Originated GPS Position Location Session Test 2-13
2.2.2.1 Access Channel Test 2-13
2.2.2.1.1 Definition 2-13
2.2.2.1.2 Method of Measurement 2-13
2.2.2.1.3 Minimum Specification 2-14
2.2.2.2 Dedicated Channel Test 2-14
2.2.2.2.1 Definition 2-14
2.2.2.2.2 Method of Measurement 2-14
2.2.2.2.3 Minimum Specification 2-15
3 GNSS MINIMUM SPECIFICATIONS 3-1
3.1 GNSS Performance Specifications 3-1
3.1.1 Stationary Location Tests 3-2

CONTENTS

3.1.1.1 GNSS Accuracy Test 3-2
3.1.1.1.1 Definition 3-2
3.1.1.1.2 Method of Measurement 3-2
3.1.1.1.3 Minimum Specification 3-4
3.1.1.2 GNSS Dynamic Range Test 3-5
3.1.1.2.1 Definition 3-5
3.1.1.2.2 Method of Measurement 3-6
3.1.1.2.3 Minimum Specification 3-8
3.1.1.3 GNSS Sensitivity Test 3-9
3.1.1.3.1 Definition 3-9
3.1.1.3.2 Method of Measurement 3-9
3.1.1.3.3 Minimum Specification 3-11
3.1.1.4 GNSS Multipath Accuracy Test 3-11
3.1.1.4.1 Definition 3-11
3.1.1.4.2 Method of Measurement 3-12
3.1.1.4.3 Minimum Specification 3-14
3.1.2 Moving Scenario Test 3-15
3.1.2.1 Moving Scenario GNSS Accuracy Test 3-15
3.1.2.1.1 Definition 3-15
3.1.2.1.2 Method of Measurement 3-16
3.1.2.1.3 Minimum Specification 3-18
4 AFLT MINIMUM SPECIFICATION 4-19
4.1 General Comments on AFLT Tests 4-19
4.2 AFLT Performance Specifications 4-20
4.2.1 AFLT Accuracy Test 4-20
4.2.1.1 Definition 4-20
4.2.1.2 Method of Measurement 4-20
4.2.1.3 Minimum Specification 4-21
4.2.2 AFLT Sensitivity Test 4-22
4.2.2.1 Definition 4-22
4.2.2.2 Method of Measurement 4-22

CONTENTS

4.2.2.3 Minimum Specification 4-23
4.3 AFLT Protocol Tests 4-23
4.3.1 AFLT Position Location Session on the Paging Channel Test 4-24
4.3.1.1 Definition 4-24
4.3.1.2 Method of Measurement 4-24
4.3.1.3 Minimum Specification 4-24
4.3.2 Mobile Station Originated AFLT Position Location Session Test 4-25
4.3.2.1 Access Channel Test 4-25
4.3.2.1.1 Definition 4-25
4.3.2.1.2 Method of Measurement 4-25
4.3.2.1.3 Minimum Specification 4-26
4.3.2.2 Dedicated Channel Test 4-26
4.3.2.2.1 Definition 4-26
4.3.2.2.2 Method of Measurement 4-26
4.3.2.2.3 Minimum Specification 4-27
5 HYBRID MINIMUM SPECIFICATIONS 5-1
5.1 General Comments on Hybrid Tests 5-1
5.2 Hybrid Performance Specifications 5-2
5.2.1 One Base Station + Three Satellites Hybrid Test 5-2
5.2.1.1 Definition 5-2
5.2.1.2 Method of Measurement 5-2
5.2.1.3 Minimum Specification 5-3
5.2.2 Two Base Stations + One Satellite Hybrid Test 5-3
5.2.2.1 Definition 5-3
5.2.2.2 Method of Measurement 5-4
5.2.2.3 Minimum Specification 5-5
6 STANDARD TEST CONDITIONS 6-1
6.1 Standard Equipment 6-1
6.1.1 Basic Equipment 6-1
6.1.2 Associated Equipment 6-1
6.2 Standard Environmental Test Conditions 6-1

CONTENTS

6.3 Standard Conditions for the Primary Power Supply 6-1
6.3.1 General Requirements 6-1
6.3.2 Standard DC Test Voltage from Accumulator Batteries 6-1
6.3.3 Standard AC Voltage and Frequency 6-2
6.4 Standard CDMA Test Equipment 6-2
6.4.1 Base Station Simulator Equipment 6-2
6.4.1.1 Transmitter Equipment 6-2
6.4.1.2 Receiver Equipment 6-3
6.4.1.3 Protocol Support 6-3
6.4.1.4 Timing Signals 6-3
6.4.1.5 Base Station *Data Burst Message* Transport Capability 6-3
6.4.2 Synchronization of Base Stations 6-4
6.4.3 CDMA Pilot Generator Equipment 6-5
6.4.3.1 Transmit Equipment 6-5
6.4.3.2 Timing Signals 6-5
6.4.3.3 Synchronization of a CDMA Pilot Generator 6-5
6.5 GPS Simulator Equipment 6-5
6.6 GNSS Simulator Equipment 6-6
6.7 Synchronization of the Serving Base Station and the GPS Simulator 6-8
6.8 Synchronization of the Serving Base Station and the GNSS Simulator 6-9
6.9 AWGN Generator Equipment 6-10
6.10 PDE Simulator Equipment 6-11
6.10.1 PDE Simulator Responses 6-12
6.10.2 *Position Determination Data Message* Call Flows 6-12
6.11 MS Logging Entity 6-20
6.12 Functional System Set-ups 6-20
6.12.1 Functional Block Diagrams 6-20
6.12.2 General Comments 6-24
Annex A – METHOD OF GENERATING PDE SIMULATOR RESPONSES A-1
A.1 General Requirements for *Position Determination Data Message* Origination A-1
A.1.1 *Data Burst Message* Origination A-1

CONTENTS

A.1.2 *Position Determination Data Message* Origination A-1
A.1.3 *Position Determination Data Message* Segmentation A-5
A.2 Method of Selecting the PDE Simulator Response Message A-5
A.2.1 PDE Simulator Response Type A-5
A.2.2 PDE Simulator Response Reference Time A-8
A.3 Method of Determining the PDE Simulator Response Values A-15
A.3.1 Setting of PDE Simulator Response Field Counters A-15
A.3.2 Calculating of PDE Simulator Numerical Parameter Values A-17
A.3.3 Setting of PDE Simulator Response Information Parameters A-17
A.3.4 Setting of PDE Simulator Request Information Parameters A-20
Annex B – REFERENCE GPS NAVIGATION DATA, SYSTEM TIME AND USER LOCATION B-1
B.1 Reference Location B-1
B.2 Reference Time B-1
B.3 Reference Ephemeris B-1
B.4 Reference Almanac B-6
B.5 List of Active Satellites B-13
B.6 Simulated Base Station Locations B-14
B.7 Simulated Mobile Station Locations B-14
B.8 Additional GPS Simulator Settings B-15
Annex C – REFERENCE GNSS NAVIGATION DATA, SYSTEM TIME AND USER LOCATION C-1
C.1 Reference Location C-1
C.2 Reference Time C-1
C.3 Reference GPS Ephemeris C-1
C.4 Reference GPS Almanac C-5
C.5 Reference GLONASS Ephemeris C-13
C.6 Reference GLONASS Almanac C-17
C.7 Reference Ephemeris of Galileo C-22
C.8 Reference Almanac of Galileo C-23
C.9 Reference Ephemeris of QZSS C-23
C.10 Reference Almanac of QZSS C-23

CONTENTS

C.11 Reference Ephemeris of SBAS C-23
C.12 Reference Almanac of SBAS C-23
C.13 List of Active Satellites C-23
C.14 Simulated Base Station Locations C-24
C.15 Simulated Mobile Station Locations C-25
C.16 Additional GNSS Simulator Settings C-25
Annex D – METHOD OF STATISTICAL CONFIDENCE DETERMINATION D-1
D.1 Description of the Confidence Determination Method D-1
D.2 Evaluation Example D-3
Annex E PDE SIMULATOR RESPONSE MESSAGES E-1

FIGURES

Figure 6.10.2-1 Example Successful Call Flow for Test Modes 1 and 2 for non-GNSS Test Cases 6-15

Figure 6.10.2-2 Example Successful Call Flow for Test Modes 3 and 4 for non-GNSS Test Cases, with Mobile Station that is Capable of Location Calculation..... 6-16

Figure 6.10.2-3 Example Successful Call Flow for Test Modes 3 and 4 for non-GNSS Test Cases, with Mobile Station that is not Capable of Location Calculation..... 6-17

Figure 6.10.2-4 Example Successful Call Flow for Test Modes 1 and 2 for GNSS Test Cases, with Mobile Station that is Capable of Location Calculation..... 6-18

Figure 6.10.2-5 Example Successful Call Flow for Test Modes 1 and 2 for GNSS Test Cases, with Mobile Station that is not Capable of Location Calculation..... 6-18

Figure 6.10.2-6 Example Successful Call Flow for Test Modes 3 and 4 for GNSS Test Cases 6-20

Figure 6.12.1-1 Functional Set-up for GPS Tests..... 6-21

Figure 6.12.1-2 Functional Set-up for AFLT Tests 6-22

Figure 6.12.1-3 Functional Set-up for Hybrid Tests..... 6-23

Figure 6.12.1-4 Functional Set-up for GNSS Tests 6-24

TABLES

Table 1.6-1 Summary of Test Evaluation Parameters 1-12
Table 1.6.2.1.1-1 Returned Parameter Fields and Corresponding Error Indications 1-19
Table 1.6.2.2-1 Returned RMS Error Estimate Parameter Fields and Corresponding Error Indications 1-24
Table 2.1.1.1.2-1 Satellite Signal Levels for the GPS Accuracy Test 2-2
Table 2.1.1.1.3-1 Minimum Specifications for the GPS Accuracy Test 2-3
Table 2.1.1.2.2-1 Satellite Signal Levels for the GPS Dynamic Range Test 2-4
Table 2.1.1.2.3-1 Minimum Specifications for the GPS Dynamic Range Test 2-5
Table 2.1.1.3.2-1 Satellite Signal Levels for the GPS Sensitivity Test 2-6
Table 2.1.1.3.3-1 Minimum Specifications for the GPS Sensitivity Test 2-7
Table 2.1.1.4.2-1 Satellite Signal Levels for the GPS Multipath Accuracy Test 2-8
Table 2.1.1.4.3-1 Minimum Specifications for the GPS Multipath Accuracy Test 2-9
Table 2.1.2.1.2-1 Satellite Signal Levels for the Moving Scenario GPS Accuracy Test 2-10
Table 2.1.2.1.3-1 Minimum Specifications for the Moving Scenario GPS Accuracy Test . 2-11
Table 2.2.1.2-1 Satellite Signal Levels for the Protocol Tests 2-12
Table 2.2.1.3-1 Minimum Specifications for the GPS Position Location Session on the Paging Channel Test 2-13
Table 2.2.2.1.3-1 Minimum Specifications for the Mobile Station Originated GPS Position Location Session Tests 2-14
Table 3-1 Relative Signal Power Levels for Various Signal Types 3-1
Table 3.1.1.1.2-1 Satellite Signal Levels for the GNSS Accuracy Test 3-3
Table 3.1.1.1.2-2 Satellite Allocation for the GNSS Accuracy Test 3-3
Table 3.1.1.1.3-1 Minimum Specifications for the GNSS Accuracy Test 3-5
Table 3.1.1.2.2-1 Satellite Signal Levels for the GNSS Dynamic Range Test 3-7
Table 3.1.1.2.2-2 Satellite Allocation for the GNSS Dynamic Range Test 3-7
Table 3.1.1.2.3-1 Minimum Specifications for the GNSS Dynamic Range Test 3-8
Table 3.1.1.3.2-1 Satellite Signal Levels for the GNSS Sensitivity Test 3-10
Table 3.1.1.3.2-2 Satellite Allocation for the GNSS Sensitivity Test 3-10
Table 3.1.1.3.3-1 Minimum Specifications for the GNSS Sensitivity Test 3-11
Table 3.1.1.4.2-1 Satellite Signal Levels for the GNSS Multipath Accuracy Test 3-13
Table 3.1.1.4.2-2 Satellite Allocation for the GNSS Multipath Accuracy Test 3-13
Table 3.1.1.4.3-1 Minimum Specifications for the GNSS Multipath Accuracy Test 3-15

TABLES

Table 3.1.2.1.2-1 Satellite Signal Levels for the Moving Scenario GNSS Accuracy Test... 3-17

Table 3.1.2.1.2-2 Satellite Allocation for the Moving Scenario GNSS Accuracy Test 3-17

Table 3.1.2.1.3-1 Minimum Specifications for the Moving Scenario GNSS Accuracy Test3-18

Table 4.2.1.2-1 Signal Levels for the AFLT Accuracy Test 4-20

Table 4.2.1.3-1 Minimum Specifications for the AFLT Accuracy Test 4-21

Table 4.2.2.2-1 Signal Levels for the AFLT Sensitivity Test 4-22

Table 4.2.2.3-1 Minimum Specifications for the AFLT Sensitivity Test 4-23

Table 4.3.1.2-1 Signal Levels for the AFLT Protocol Tests 4-24

Table 4.3.1.3-1 Minimum Specifications for the AFLT Position Location Session on the Paging Channel Test 4-25

Table 4.3.2.1.3-1 Minimum Specifications for the Mobile Station Originated AFLT Position Location Session Tests 4-26

Table 5.2.1.2-1 Satellite Signal Levels for the One Base Station + Three Satellites Hybrid Test 5-2

Table 5.2.1.3-1 Minimum Specifications for the One Base Station + Three Satellites Hybrid Test 5-3

Table 5.2.2.2-1 Base Station Signal Levels for the Two Base Stations + One Satellite Hybrid Test 5-4

Table 5.2.2.2-2 Satellite Signal Level for the Two Base Stations + One Satellite Hybrid Test 5-4

Table 5.2.2.3-1 Minimum Specifications for the Two Base Stations + One Satellite Hybrid Test 5-5

Table 6.6-1 Frequencies for Various GNSS Signal Types 6-7

Table 6.6-2 Output Ranges for Various GNSS Signal Types 6-8

Table 6.9-1 AWGN Generator Frequency Ranges 6-11

Table 6.12.2-1 Special Field Values of the *System Parameters Message* 6-25

Table 6.12.2-2 Special Field Value of the *Extended System Parameters Message* 6-26

Table 6.12.2-3 Special Field Values of the *Access Parameters Message* 6-26

Table 6.12.2-4 Special Field Values of the *General Neighbor List Message* for the Serving Base Station 6-27

Table 6.12.2-5 Time Limit and Constant Values 6-28

Table A.1.2-1 *Position Determination Data Message* Format for Test Modes 1 and 2 if PD_MSG_TYPE='00000000' A-1

TABLES

Table A.1.2-2 *Position Determination Data Message* Format for Test Modes 1 and 2 if PD_MSG_TYPE=’00000010’ A-2

Table A.1.2-3 *Position Determination Data Message* Format for Test Modes 3 and 4, with a Mobile Station that is Capable of Position Calculation, if PD_MSG_TYPE=’00000000’ ... A-3

Table A.1.2-4 *Position Determination Data Message* Format for Test Modes 3 and 4, with a Mobile Station that is not Capable of Position Calculation, if PD_MSG_TYPE=’00000000’ A-4

Table A.1.2-5 *Position Determination Data Message* Format for Test Modes 3 and 4, if PD_MSG_TYPE=’00000010’ A-5

Table A.2.1-1 PDE Simulator Response Types for PDDMs with PD_MSG_TYPE=’00000000’ A-6

Table A.2.1-2 PDE Simulator Response Types for PDDMs with PD_MSG_TYPE=’00000010’ A-7

Table A.2.2-1 PDE Simulator Response Reference Time Information for Non-GNSS Test Cases A-9

Table A.2.2-2 PDE Simulator Response Reference Time Information for GNSS Test Cases . A-11

Table A.3.1-1 PDE Simulator Response Field Counter Settings A-16

Table A.3.3-1 PDE Simulator Response Information Parameters A-19

Table A.3.4-1 PDE Simulator Request Information Parameters A-21

Table B.8-1 GPS Simulator Settings B-16

Table C.13-1 GPS and GLONASS Satellites Simulated for GNSS Accuracy, GNSS Sensitivity and GNSS Moving Scenario Tests C-23

Table C.13-2 GPS and GLONASS Satellites Simulated for GNSS Dynamic Range Test ... C-24

Table C.13-3 GPS and GLONASS Satellites Simulated for GNSS Multipath Test C-24

Table C.16-1 Additional GPS Settings for GNSS Simulator C-26

Table D.1-1 Identification of Location Error Samples for Comparison with FCC Required Thresholds of 67% and 95% (at the 90% Confidence Level) D-2

Table D.1-2 Identification of Location Error Samples With Thresholds of 67% and 80% (at the 90% Confidence Level) D-2

Table E.1 Pilot PN Offset and BASE_ID Assignment Used in the PDE Simulator Response Messages E-1

FOREWORD

1. This Specification uses the following verbal forms: “Shall” and “shall not” identify requirements to be followed strictly to conform to the Specification and from which no deviation is permitted. “Should” and “should not” indicate that one of several possibilities is recommended as being particularly suitable, without mentioning or excluding others; that a certain course of action is preferred but not necessarily required; or that (in the negative form) a certain possibility or course of action is discouraged but not prohibited. “May” and “need not” indicate a course of action permissible within the limits of the Specification. “Can” and “cannot” are used for statements of possibility and capability, whether material, physical, or causal.

2. There are four Annexes in this Specification. Annexes A, B, C and D are normative and are considered part of this Specification. Annex D contains a data file attachment that is normative and is considered part of this Specification.

3. The terms “location” and “position” are used interchangeably throughout this document. In this respect the definition of the term differs from the historic use of location in wireless systems to identify the mobile’s current serving system.

4. Those wishing to deploy systems compliant with this Specification should also be compliant with Parts 15, 22, 24, and 27 of [4] and with the applicable rules and regulations of local administrations.

5. Those wishing to deploy systems in the United States should also take notice of the requirement to be compliant with Federal Communications Commission (FCC) Rulings on 911 Emergency Services. Meeting the requirements contained in this Specification does not guarantee compliance with the FCC requirements listed in [24].

6. The operation and messages specified in [1] apply to what is usually known as handset-based position location method. The testing of network-based methods is beyond the scope of this Specification.

7. Footnotes appear at various points in this Specification to elaborate and to further clarify items discussed in the body of the Specification.

8. Unless indicated otherwise, this document presents numbers in decimal form. Binary numbers are distinguished in the text by the use of single quotation marks.

9. The following operators define mathematical operations:

   $\times$ indicates multiplication.

   / indicates division.

   + indicates addition.

   - indicates subtraction.

   * indicates complex conjugation.

   $\in$ indicates a member of the set.

   $\lfloor x \rfloor$ indicates the largest integer less than or equal to x: $\lfloor 1.1 \rfloor = 1, \lfloor 1.0 \rfloor = 1$.

   $\lceil x \rceil$ indicates the smallest integer greater or equal to x: $\lceil 1.1 \rceil = 2, \lceil 2.0 \rceil = 2$.

   $|x|$ indicates the absolute value of x: $|-17|=17$, $|17|=17$.

NOTES

$\oplus$ indicates exclusive OR (modulo-2 addition).

min (x, y) indicates the minimum of x and y.

max (x, y) indicates the maximum of x and y.

x mod y indicates the remainder after dividing x by y: x mod y = x - (y $\times \lfloor x/y \rfloor$).

$\mathrm{Re}\{x\}$ indicates the real part of x.

$\mathrm{Im}\{x\}$ indicates the imaginary part of x.

9. This Specification supports testing of mobile stations compliant with [1].

10. This Specification supports testing of mobile stations that meet the minimum specifications specified in [10].

11. This Specification tests only the position location functionality of a mobile station. Testing interoperation with other services, such as voice, data or SMS, is beyond the scope of this document.

12. This Specification does not support testing mobile station cold start time to first fix requirements.

13. References in this document are to TIA/EIA-95-B. This Specification is equally applicable to TIA/EIA/IS-2000 and TIA/EIA/IS-2000-A. Except where explicit references are made to TIA/EIA/IS-2000, the reference to TIA/EIA-95-B can be converted directly to TIA/EIA/IS-2000 and TIA/EIA/IS-2000-A usage.

14. The terms “base station” and “base station simulator” are used interchangeably throughout this document, reflecting the fact that either type of equipment may be used as long as all test equipment requirements given in this Specification are satisfied.

15. Some tests in this revision specify using a physical CDMA channel that is not mandatory for IS-2000-A mobile stations. If the mobile station does not support a specified physical channel, then the equivalent IS-2000-A-only physical channel should be used instead. Specifically, the Broadcast Control Channel and Forward Command Control Channel should be used in place of the Paging Channel, the Enhanced Access Channel should be used in place of the Access Channel, and the Dedicated Control Channel should be used in place of the Traffic (Fundamental) channel.

16. For the test parameter tables, $\hat{I}or$ is specified in terms of power spectral density in a Spreading Rate 1 bandwidth. For testing applicable to Spreading Rate 3, the total received power in a Spreading Rate 3 bandwidth is effectively 5 dB higher.

17. Wherever this document refers to CDMA System time in frames, it is taken to mean an integer value T such that: $T = \lfloor t/0.02 \rfloor$, where t represents System Time in seconds.

18. The tests will be performed using modulated L1 carriers; however, the specification of the signal levels is based upon an unmodulated L1 carrier, referenced to the mobile station antenna input.

REFERENCES

The following Specifications contain provisions that, through reference in this text, constitute provisions of this Specification. At the time of publication, the editions indicated were valid. All Specifications are subject to revision, and parties to agreements based on this Specification are encouraged to investigate the possibility of applying the most recent editions of the Specifications indicated below. ANSI and TIA maintain registers of currently valid national Standards published by them.

References are either specific (identified by date of publication, revision identifier, and version number) or non-specific.

- For a specific reference, subsequent revisions may not apply.
- For a non-specific reference, the latest revision applies.

NORMATIVE REFERNCES

1. 3GPP2 C.S0022-B v2.0, *Position Determination Service for cdma2000 Spread Spectrum Systems*, October 2010.
2. 3GPP2 C.S0002-E v3.0, *Physical Layer Standard for cdma2000 Spread Spectrum Systems*, June 2011.
3. DMA TR 8350.2, *Defense Mapping Agency Publication*, June 2004.
4. CFR Title 47, *Code of Federal Regulations*, October 2011.
5. FCC 00-326, CC Docket No. 94-102, *Fourth Memorandum Opinion and Order in the Matter of Revision of the Commission's Rules to Ensure Compatibility with Enhanced 911 Emergency Calling Systems*, September 2000.
6. FCC OET Bulletin No. 71, *Guidelines for Testing and Verifying the Accuracy of Wireless E911 Location Systems*, April 2000.
7. GPS Navstar, *Global Positioning System Standard Positioning Service Signal Specification*, September 2008.

INFORMATIVE REFERENCES

8. J-STD-036, *Enhanced Wireless 9-1-1 Phase 2*, August 2011.
9. 3GPP2 C.S0010-D v1.0, *Recommended Minimum Performance Standards for cdma2000 Spread Spectrum Base Stations*, September 2010.
10. 3GPP2 C.S0011-D v1.0, *Recommended Minimum Performance Standard for cdma2000 Spread Spectrum Mobile Stations*, March 2011.
11. C.S0004-E v3.0, *Signaling Link Access Control (LAC) Standard for cdma2000 Spread Spectrum Systems*, June 2011.
12. C.S0005-E v3.0, *Upper Layer (Layer 3) Signaling Standard for cdma2000 Spread Spectrum Systems*, June 2011.

REFERENCES

13. C.R1001-H v1.0, *Administration of Parameter Value Assignments for TIA/EIA Spread Spectrum Standards*, July 2011.
14. 3GPP2 C.S0026-A v1.0, *Test Data Service Option (TDSO) for cdma2000 Spread Spectrum Systems*, February 2005.
15. 3GPP2 C.S0025-A v1.0, *Markov Service Option (MSO) for cdma2000 Spread Spectrum Systems*, March 2011.
16. 3GPP2 C.S0013-B v1.0, *Loopback Service Options (LSO) for cdma2000 Spread Spectrum Systems*, January 2011.
17. IS-GPS-200, Revision E, *Navstar GPS Space Segment/Navigation User Interfaces*, June, 2010.
18. IS-GPS-705, Revision A, *Navstar GPS Space Segment/User Segment L5 Interfaces*, June, 2010.
19. IS-GPS-800, Revision A, *Navstar GPS Space Segment/User Segment L1C Interfaces*, June, 2010.
20. US Department of Transportation, Federal Aviation Administration, *Specification for the Wide Area Augmentation System (WAAS)*, FAA-E-2892b August 2001.
21. IS-QZSS, *Quasi Zenith Satellite System Navigation Service Interface Specifications for QZSS*, *http://qz-vision.jaxa.jp/USE/is-qzss/index_e.html*.
22. *Global Navigation Satellite System GLONASS Interface Control Document*, Version 5.1, 2008.
23. *Galileo Interface Control Document, http://ec.europa.eu/enterprise/policies/satnav/galileo/open-service/index_en.htm*
24. FCC 00-326, CC Docket No. 94-102, *Fourth Memorandum Opinion and Order in the Matter of Revision of the Commission's Rules to Ensure Compatibility with Enhanced 911 Emergency Calling Systems*, September 2000.

REFERENCES

1 This page intentionally left blank.

1 INTRODUCTION

1.1 Scope

This Specification details definitions, methods of measurement, and minimum performance characteristics for Position Location Capable Code Division Multiple Access (CDMA) mobile stations. This Specification shares the purpose of [1] (and subsequent revisions thereof) by ensuring that a mobile station's location can be determined in any wireless system that meets the compatibility requirements of [1].

Test methods are recommended in this document; however, methods other than those recommended may suffice for the same purpose.

1.2 Terms and Definitions

2D Fix. A two-dimensional (latitude and longitude) position determination process.

3D Fix. A three-dimensional (latitude, longitude and height) position determination process.

Access Channel. A Reverse CDMA Channel used by mobile stations for communicating to the base station. The Access Channel is used for short signaling message exchanges, such as call originations, responses to pages, and registrations. The Access Channel is a slotted random access channel.

Advanced Forward Link Trilateration (AFLT). A geolocation technique that utilizes the mobile station's measured time-difference-of-arrival of radio signals from the base stations (and, possibly, other terrestrial measurements).

AFLT. See Advanced Forward Link Trilateration.

Almanac. See GPS Almanac.

Alpha. See Alpha, Beta Parameters.

Alpha, Beta Parameters. Ionospheric parameters, which allow the "L1 only" user to utilize the ionospheric model for computation of the ionospheric delay. Alpha and Beta parameters are contained in page 18 of subframe 4 of the GPS navigation message frame.

Assistance Data. The assistance data provided by the base station to the mobile station for various purposes (for example, acquisition, location calculation or sensitivity improvement).

Authentication. An algorithmic exchange procedure used by a base station to validate a mobile station's identity.

Autonomous Mobile Station. A mobile station that is capable of autonomously determining its own position without any help from the base station.

Autonomous Base Station. A base station capable of determining the location of the mobile station without requiring any cooperation from the mobile station.

Azimuth. An angle that specifies a direction in the horizontal plane, expressed in degrees measured clockwise from True North.

AWGN. Additive White Gaussian Noise.

Bad Satellite. A bad satellite is one that is unusable for position calculation. See Satellite Health.

Band Class. A set of frequency channels and a numbering scheme for these channels.

Base Station. The base station includes the transceiver equipment, Mobile Switching Center (MSC), Mobile Positioning Center (MPC), Position Determination Entity (PDE) and any Inter-Working Function (IWF) required for network connection.

Base Station Almanac. The location coordinates and reference time correction parameters for a collection of base stations in the immediate neighborhood of the mobile station (the size of the immediate neighborhood is a service provider option).

Beta. See Alpha, Beta Parameters.

bps. Bits-per-second.

C/A Code. Coarse/Acquisition code used for spectral spreading of the GPS signal.

C/A Code Chip. The interval defined by the chipping (spreading) rate of the GPS C/A code. Stated as a time interval, one chip equals approximately 977.5 ns; as a distance it is approximately 293.0 m.

C/N_0. The ratio of the unmodulated carrier signal power (C) to the power spectral density of background noise (N_0).

CDMA. See Code Division Multiple Access.

CDMA Channel. The set of channels transmitted between the base station and the mobile station within a given CDMA frequency assignment.

CDMA Code Boundary. The point in time where the system time modulo the PN code period is precisely zero.

CDMA System Time. All base station digital transmissions are referenced to a common CDMA system-wide time scale that uses the Global Positioning System (GPS) time scale, which is traceable to and synchronous with Universal Coordinated Time (UTC). GPS and UTC differ by an integer number of seconds, specifically the number of leap second corrections added to UTC since January 6, 1980. The start of CDMA System Time is January 6, 1980 00:00:00 UTC, which coincides with the start of GPS time. (See TIA/EIA/95-B Section 1.2). Note that if the CDMA baseband transmit signal is modeled as a complex impulse train passed through a symmetric non-causal filter, then the precise zero instant of system time modulo the pilot PN sequence code period is given by the midpoint between the impulse representing the last element of the pilot PN sequence and the subsequent impulse representing the first element of the pilot PN sequence. The impulse train represents the pilot PN sequence, where the impulses are separated by exactly one PN code chip. The symmetric non-causal filter represents the baseband filter shape prior to the pre-equalization filter.

CNAV. See GPS CNAV Message.

CNAV-2. See GPS CNAV-2 Message.

Code Channel. A subchannel of a Forward CDMA Channel or Reverse CDMA Channel. Each subchannel uses an orthogonal Walsh function or quasi-orthogonal function.

Code Division Multiple Access (CDMA). A technique for spread-spectrum multiple-access digital communications that creates channels through the use of unique code sequences.

Code Phase. At a given time, the code phase is the fraction of the code period that has elapsed since the latest code boundary (GPS or CDMA).

Code Phase Search Window. The expected range of possible code phase values.

dBm. A measure of power expressed in terms of its ratio (in dB) to one milliwatt.

dBm/Hz. A measure of power spectral density. The ratio, dBm/Hz, is the power in one Hertz of bandwidth, where power is expressed in units of dBm.

dBW. A measure of power expressed in terms of its ratio (in dB) to one watt.

DGNSS. Differential GNSS.

DGPS. Differential GPS.

Dilution of Precision. A measure of position determination accuracy that is solely a function of the geometrical layout of the reference points used in the position determination, as seen from the estimated position (for GPS, position of the satellites relative to the receiver antenna). One-sigma position error is approximately the product of the value of the Dilution of Precision and the one-sigma error in measured range from the mobile station to the reference points.

DOP. See Dilution of Precision.

Doppler nth Order. The nth order moment specifying a satellite's observed Doppler.

Doppler Search Window. The expected range of possible Doppler values.

E_b. Average energy of an information bit at the mobile station antenna input.

$\frac{E_b}{N_t}$. The ratio in dB of the combined received energy per bit to the effective noise power spectral density at the mobile station antenna input.

E_c. Average energy accumulated over one PN chip period.

$\frac{E_c}{I_{or}}$. The ratio in dB between the energy accumulated over one PN chip period (E_C) to the total transmit power spectral density.

ECEF. "Earth-Centered-Earth-Fixed". A frame of reference for specifying positions that is centered in the center of the Earth and rotates with it.

EGNOS. See SBAS.

Elevation Angle. The angle between a (GPS) satellite and the horizon, expressed in degrees.

Ephemeris. The precise (high accuracy) orbital parameters of one GPS satellite, as transmitted by that satellite in GPS subframes 2 and 3.

Extended Base Station Almanac. The location coordinates and reference time correction parameters for a collection of base stations in the extended neighborhood of the mobile station (the size of the extended neighborhood is a service provider option).

Fix. The process of performing position computation.

Forward Traffic Channel. One or more code channels used to transport user and signaling traffic from the base station to the mobile station.

Frame. See GPS Navigation Message Frame.

GAGAN. See SBAS.

Galileo. Galileo is a global navigation satellite system currently being built by the European Union (EU) and European Space Agency (ESA).

Geolocation. The process of determining a geographic location.

GHz. Gigahertz (10^9 Hertz).

GLONASS. GLObal'naya NAvigatsionnaya Sputnikovaya Sistema; (English: Global Navigation Satellite System), developed by the former Soviet Union and now operated for the Russian government by the Russian Space Forces.

GNSS. Global Navigation Satellite System is the standard generic term for satellite navigation systems that provide autonomous geo-spatial positioning with global or reginal coverage, such as GPS, GLONASS, or Galileo.

GPS. Global Positioning System.

GPS Almanac. The almanac data are a reduced-precision subset of the clock and ephemeris parameters for all satellites, as transmitted by every satellite in GPS subframes 4 and 5.

GPS CNAV Navigation Message. The GPS CNAV (Civil Navigation) data is an upgraded version of the original NAV navigation message. It contains higher precision representation and nominally more accurate data than the NAV data. The CNAV message format consists of 300-bit message packets of different types.

GPS CNAV-2 Navigation message. The GPS CNAV-2 navigation message modulated on the L1C signal consists of three subframes of varying length. Subframe 1 provides Time of Interval (TOI) count, subframe 2 provides ephemeris and clock corections, and subframe 3 which varies from frame to frame provides almanac and other data.

GPS Code Boundary. The point in time where the system time modulo the C/A code period is precisely zero.

GPS Navigation Message Frame. A GPS navigation message frame contains five subframes. Subframes 1 through 3 contain ephemeris and clock parameters; subframes 4 and 5 contain message and almanac parameters.

GPS Navigation Message Subframe. One of the five GPS subframes of the GPS navigation message. The subframe is 300-bits long.

GPS Navigation Message Superframe. A GPS navigation message superframe consists of 25 frames and has a duration of 12.5 minutes.

Handset-based Position Location. A position location method, where the underlying, fundamental measurements to be used in the location calculation are made at the mobile station. The location calculation itself can be performed by either the mobile station or by one or more network entities. See also Network-based Position Location.

ICD. Interface Control Document.

I_{oc}. The power spectral density of a band-limited white noise source, simulating interference from other cells or other channel interference or both, as measured at the mobile station antenna input. See also OCNS.

I_{or}. The total transmit power spectral density of the Forward CDMA Channel at the base station antenna output.

$\hat{I}_{or}$. The received power spectral density of the Forward CDMA Channel as measured at the mobile station antenna input.

IWF. InterWorking Function. A network entity enabling interactions between network elements, such as interactions between an MSC and a landline function. The IWF usually performs protocol conversions as its primary function.

kHz. Kilohertz (10^3 Hertz).

Legacy Terminal. A mobile station that does not support the position determination techniques described in Reference [1].

Location. The terms "location" and "position" are used interchangeably throughout this document. In this respect, the definition of the term differs from the historic use of location in wireless systems to identify the mobile's current serving system. See Position.

LOS. Line of Sight.

LSB. Least Significant Bit.

Mean Input Power. The total received calorimetric power measured in a specified bandwidth at the antenna input, including all internal and external signal and noise sources.

Mean Output Power. The total transmitted calorimetric power measured in a specified bandwidth at the antenna output when the transmitter is active.

MHz. Megahertz (10^6 Hertz).

MPC. Mobile Positioning Center: The network entity that serves as the point of interface of the wireless network for the exchange of geographic position information.

Mobile Station (MS). A station that communicates with the base station.

Mobile Station Originated Message. A message originating from a mobile station.

Mobile Station Terminated Message. A message received by a mobile station.

Mobile Switching Center (MSC). A configuration of equipment that provides cellular radio-telephone service. Also called the Mobile Telephone Switching Office (MTSO).

Modernized GPS. The GPS modernization project involves new ground stations and new satellites with additional navigation signals to improve the accuracy and availability for GPS users. The additional navigation signals include a Civilian L2 (L2C) signal, a Safety-of-Life L5 signal, and a new Civilian L1 (L1C) signal, together with improved navigation message data (see CNAV, CNAV-2).

ms. Millisecond (10^{-3} second).

MS. See Mobile Station.

MSAS. See SBAS.

MSB. Most Significant Bit.

MSC. See Mobile Switching Center.

Navigation Message Bits. The message bits (50 bits-per-second) transmitted by GPS satellites, containing the satellite clock, ephemeris, almanac and other parameters.

N_0. The effective inband noise or interference power spectral density.

N_t. The effective noise power spectral density at the mobile station antenna input.

N/A. Not applicable.

Network-based Position Location. A position location method, where the underlying, fundamental measurements to be used in the location calculation are made by the terrestrial network, typically by one or more base stations. See also Handset-based Position Location.

ns. Nanosecond (10^{-9} second).

N/S. Not specified.

OCNS. See Orthogonal Channel Noise Simulator.

OCNS E_c. Average energy per PN chip for the OCNS.

$\frac{\text{OCNS } E_c}{I_{or}}$. The ratio of the average transmit energy per PN chip for the OCNS to the total transmit power spectral density.

Orthogonal Channel Noise Simulator. A hardware mechanism used to simulate the users on the other orthogonal channels of a Forward CDMA Channel.

Paging Channel (PCH). A code channel in a Forward CDMA Channel used for transmission of control information and pages from a base station to a mobile station.

PDE. See Position Determination Entity.

Pilot Channel. An unmodulated, direct-sequence spread spectrum signal transmitted by a CDMA base station or mobile station. A pilot channel provides a phase reference for coherent demodulation and may provide a means for signal strength comparisons between base stations for determining when to handoff.

Pilot E_c. Average energy per PN chip for the Pilot Channel.

$\frac{\text{Pilot } E_c}{I_o}$. The ratio of the received pilot energy per chip, E_C, to the total received power spectral density (noise and signals).

$\frac{\text{Pilot } E_c}{I_{or}}$. The ratio of the transmit pilot energy per chip, E_C, to the total transmit power spectral density.

Pilot Phase Offset. The time difference measured at the mobile station between the earliest arriving useable multipath component of a pilot and the mobile station system time reference. The AFLT technique is based primarily on Pilot Phase Offset data.

Pilot PN Sequence. A pair of modified maximal length PN sequences used to spread the Forward CDMA Channel and the Reverse CDMA Channel. Different base stations are identified by different pilot PN sequence offsets.

PN. Pseudonoise.

PN Chip. One bit in the PN sequence.

PN Offset. The PN offset measured in units of 64 PN chips of a pilot, relative to the zero-offset pilot PN sequence.

PN Sequence. Pseudonoise sequence. A periodic binary sequence.

Position. The geographic position of the mobile station expressed in latitude and longitude and height.

Position Determination Entity (PDE). A network entity that manages the position or geographic location determination of the mobile station.

ppb. Parts-per-billion.

Pseudodoppler. The measured Doppler frequency shift in the signal received from the GPS satellite. Since the satellite and receiver clock drifts are included, it is referred to as pseudodoppler.

Pseudorange. The measured range (in GPS chips) from the observed satellite to the GPS receiver antenna. Since the satellite and receiver clock biases are included, it is referred to as pseudorange.

Push. An unsolicited response.

PRN Number. The GPS PRN signal number as defined in ICD-GPS-200C, table 3-I.

QZSS. Quasi-Zenith Satellite System (QZSS) is a regional navigation satellite system where the eccentricity and elevation of the satellite orbits are selected so that the minimum elevation angle through 24 hours in Japan is larger than about 60 degrees. The satellite signals are fully compatible and interoperable with GPS and its modernization.

Reference Bit Boundary. A boundary between two 20-ms GPS bit intervals chosen as the reference point for code phases.

Reverse Traffic Channel. A traffic channel on which data and signaling are transmitted from a mobile station to a base station.

RMS. Root of Mean Square.

s. Second.

Satellite Clock Correction. Bits nine through 24 of word eight, bits one through 24 of word nine, and bits one through 22 of word ten in GPS subframe one contain the parameters needed by the user for apparent satellite clock correction (t_{oc}, a_{f2}, a_{f1}, a_{f0}).

Satellite Health. Satellite health is the information identifying a satellite as usable for position calculation.

SBAS. Satellite Based Augmentation System. Several independent but compatible satellite based augmentation systems exist: The American Wide Area Augmentation System (WAAS), the European Geostationary Navigation Overlay Service (EGNOS), the Indian GPS Aided GEO Augmented Navigation System (GAGAN), and the Japanese Multi-functional Satellite Augmentation System (MSAS). The (GPS-like) ranging signals from all these SBASs are here considered as a single GNSS, although this GNSS is not a standalone positioning system because of the small number of satellites and their distribution in space.

Sensitivity. The minimum level (dBm) of received GPS signal at a mobile station that allows the determination of the geolocation of the mobile station.

Serving Frequency. The CDMA frequency on which a mobile station is currently communicating with one or more base stations.

Subframe. See GPS Navigation Message Subframe.

Superframe. See GPS Navigation Message Superframe.

SV. Space Vehicle: A way of referring to one of the GPS satellites.

Time of Arrival. The time occurrence, as measured at the mobile station antenna input, of the earliest arriving usable multipath component of the signal.

Traffic Channel. A communication path between a mobile station and a base station used for user and signaling traffic. The term Traffic Channel implies a Forward Traffic Channel and Reverse Traffic Channel pair. See also Forward Traffic Channel and Reverse Traffic Channel.

Unsolicited Response. A response element that is issued in the absence of the corresponding request element.

WAAS. See SBAS.

Walsh Function. One of 2^N time orthogonal binary functions (note that the functions are orthogonal after mapping '0' to 1 and '1' to -1).

Weighting Factor. Weighting factor is a weight applied to the GPS measurement as part of a Weighted Least Squares Filter (WLSF) implementation of the navigation algorithm.

WGS-84. World Geodetic System - 1984**.**

WGS-84 Reference Ellipsoid. Worldwide datum reference system defining the surface of the Earth (note: Supersedes WGS-72); i.e., the standard physical model of the Earth used for GPS applications. Ellipsoid reference models are location-specific and may be obtained from Defense Mapping Agency publication DMA TR 8350.2 (September 30, 1987).

WLSF. Weighted Least Squares Filter navigation algorithm.

1.3 General Test Procedures

The mobile station tests presented in this Specification support various position location technologies that use an implementation compliant with [1]. Only the tests that are applicable to the technology supported by the mobile station under testing should be performed.

All applicable tests shall be performed at least once. Test results will be recorded in real-time with all actual parametric performance logged where applicable.

1.4 Test Modes

Based on the position location call flows between the serving base station and the mobile station during the tests, the following four test modes are defined:

1. Position Location Test Mode 1: This test mode is used for testing position location operation when the mobile station originates a position location session[1] on the Access Channel. Parts of the subsequent messaging related to the position location session may be carried out on a dedicated channel using Location Service Option (Service Option 35 or 36).
2. Position Location Test Mode 2: This test mode is used for testing position location operation when the mobile station originates a position location session on a dedicated channel. This test mode is entered by setting up a call using Voice Service Option or Location Service Option (Service Option 35 or 36).
3. Position Location Test Mode 3: This test mode is used for testing position location operation when the base station originates a position location session on the Paging Channel. Parts of the subsequent messaging related to the position location session may be carried out on a dedicated channel using Location Service Option (Service Option 35 or 36).
4. Position Location Test Mode 4: This test mode is used for testing position location operation when the base station originates a position location session on a dedicated channel. This test mode is entered by setting up a call using a Voice Service Option supported by the mobile station or Location Service Option (Service Option 35 or 36).

Position Location Test Modes 1 and 2 are only applied to mobile stations that support mobile originated position location sessions.

Example call flows for these test modes are described in 6.10.2.

[1] The origination of the position location session, in general, is independent of the call origination. A position location session can, for example, be initiated by the PDE during a voice call, which had been originated by the mobile station. The initiator of the position location session is defined as the entity that sends the first *Position Determination Data Message*.

1.5 Tolerances

1.5.1 CDMA System Parameter Tolerances

CDMA parameters are specified in [11], [12]. All parameters indicated in [8], [9] and [10] are exact, unless an explicit tolerance is stated.

1.5.2 Measurement Tolerances

Unless otherwise specified, a measurement tolerance, including the tolerance of the measurement equipment, of ±10% is assumed. This ±10% tolerance includes, but is not limited to the effects of VSWR, source signal levels, and variations in room temperature (15°C to 35°C).

1.6 Measurement Data Evaluation

The minimum specifications presented in this document describe tolerances applicable to numerical parameter values returned by the mobile station. The specified tolerance value types are summarized in Table 1.6-1.

Table 1.6-1 Summary of Test Evaluation Parameters

Parameter	Description
T_1	Time limit for returning *Provide MS Information*
N	Minimum number of required parameter values
T_2	Time limit for returning the N parameter values
$CODE_{1A}$	The maximum absolute error level corresponding to the 67% point for SV_CODE_PH_WH/SV_CODE_PH_FR or "Satellite code phase – whole chips/Satellite code phase – fractional chips" in *Provide Pseudorange Measurement* message[2], or for "Code phase origin/Code phase" in *Provide GNSS Pseudorange Measurement* message
$CODE_{2A}$	The maximum absolute error level corresponding to the 95% point for SV_CODE_PH_WH/SV_CODE_PH_FR or "Satellite code phase – whole chips/Satellite code phase – fractional chips" in *Provide Pseudorange Measurement* message, or for "Code phase origin/Code phase" in *Provide GNSS Pseudorange Measurement* message
$CODE_{3A}$	The maximum absolute error level corresponding to the 80% point for "Code phase origin/Code phase" in *Provide GNSS Pseudorange Measurement* message
$CODE_{1R}$	The maximum relative error level corresponding to the 67% point for SV_CODE_PH_WH/SV_CODE_PH_FR or "Satellite code phase – whole chips/Satellite code phase – fractional chips" in *Provide Pseudorange Measurement* message, or for "Code phase origin/Code phase" in *Provide GNSS Pseudorange Measurement* message
$CODE_{2R}$	The maximum relative error level corresponding to the 95% point for SV_CODE_PH_WH/SV_CODE_PH_FR or "Satellite code phase – whole chips/Satellite code phase – fractional chips" in *Provide Pseudorange Measurement* message, or for "Code phase origin/Code phase" in *Provide GNSS Pseudorange Measurement* message

[2] SV_CODE_PH_WH/SV_CODE_PH_FR and "Satellite code phase – whole chips/Satellite code phase – fractional chips" of the *Provide Pseudorange Measurement* message are used interchangeably in this document.

$CODE_{3R}$	The maximum relative error level corresponding to the 80% point for "Code phase origin/Code phase" in *Provide GNSS Pseudorange Measurement* message
DPR_1	The maximum error level corresponding to the 67% point for PS_DOPPLER or "Pseudodoppler" in *Provide Pseudorange Measurement* message[3], or for "Satellite Pseudodoppler" in *Provide GNSS Pseudorange Measurement* message
DPR_2	The maximum error level corresponding to the 95% point for PS_DOPPLER or "Pseudodoppler" in *Provide Pseudorange Measurement* message, or for "Satellite Pseudodoppler" in *Provide GNSS Pseudorange Measurement* message
DPR_3	The maximum error level corresponding to the 80% point for "Satellite Pseudodoppler" in *Provide GNSS Pseudorange Measurement* message
CNO_1	The maximum error level corresponding to the 67% point for SV_CNO or "Satellite C/No" in *Provide Pseudorange Measurement* message[4], or for "Satellite C/No" in *Provide GNSS Pseudorange Measurement* message
CNO_2	The maximum error level corresponding to the 95% point for SV_CNO or "Satellite C/No" in *Provide Pseudorange Measurement* message, or for "Satellite C/No" in *Provide GNSS Pseudorange Measurement* message
CNO_3	The maximum error level corresponding to the 80% point for "Satellite C/No" in *Provide GNSS Pseudorange Measurement* message
$PNPHASE_1$	The maximum error level corresponding to the 67% point for PILOT_PN_PHASE or "Pilot measured phase" in *Provide Pilot Phase Measurement* message[5]

[3] PS_DOPPLER and "Pseudodoppler" of the *Provide Pseudorange Measurement* message are used interchangeably in this document.

[4] SV_CNO and "Satellite C/No" of the *Provide Pseudorange Measurement* message are used interchangeably in this document.

[5] PILOT_PN_PHASE and "Pilot measured phase" of the *Provide Pilot Phase Measurement* message are used interchangeably in this document.

$PNPHASE_2$	The maximum error level corresponding to the 95% point for PILOT_PN_PHASE or "Pilot measured phase" in *Provide Pilot Phase Measurement* message
$RXPWR_1$	The maximum error level corresponding to the 67% point for TOTAL_RX_PWR or "Total received power" in *Provide Pilot Phase Measurement* message[6]
$RXPWR_2$	The maximum error level corresponding to the 95% point for TOTAL_RX_PWR or "Total received power" in *Provide Pilot Phase Measurement* message
$REFPS_1$	The maximum error level corresponding to the 67% point for REF_PILOT_STRENGTH or "Pilot strength" in *Provide Pilot Phase Measurement* message[7]
$REFPS_2$	The maximum error level corresponding to the 95% point for REF_PILOT_STRENGTH or "Pilot strength" in *Provide Pilot Phase Measurement* message
PS_1	The maximum error level corresponding to the 67% point for PILOT_SRENGTH or "Pilot strength" in "Pilot phase information" IE of the *Provide Pilot Phase Measurement* message[8]
PS_2	The maximum error level corresponding to the 95% point for PILOT_SRENGTH or "Pilot strength" in "Pilot phase information" IE of the *Provide Pilot Phase Measurement* message
$LATLONG_1$	The maximum error level corresponding to the 67% point for LAT/LONG or "Latitude/Longitude" in *Provide Location Response* message[9] or for "Latitude/Longitude" in *Provide Advanced Location Response* message
$LATLONG_2$	The maximum error level corresponding to the 95% point for LAT/LONG or "Latitude/Longitude" in *Provide Location Response* message or for "Latitude/Longitude" in *Provide Advanced Location Response* message

[6] TOTAL_RX_PWR and "Total received power" of the *Provide Pilot Phase Measurement* message are used interchangeably in this document.

[7] REF_PILOT_STRENGTH and "Pilot strength" of the *Provide Pilot Phase Measurement* message are used interchangeably in this document.

[8] PILOT_SRENGTH and "Pilot strength" in "Pilot phase information" IE of the *Provide Pilot Phase Measurement* message are used interchangeably in this document.

[9] LAT/LONG and "Latitude/Longitude" of the *Provide Pseudorange Measurement* message are used interchangeably in this document.

R_1	Lower limit for RMS error normalized by PS_RANGE_RMS_ER or "Pseudorange RMS Error" in *Provide Pseudorange Measurement* message[10], or by RMS_ERR_PHASE or "RMS error in phase measurement" in *Provide Pilot Phase Measurement* message[11], or by "Pseudorange RMS Error" in *Provide GNSS Pseudorange Measurement* message, or by "Satellite Pseudodoppler RMS Error" in *Provide GNSS Pseudorange Measurement* message
R_2	Upper limit for RMS error normalized by PS_RANGE_RMS_ER or "Pseudorange RMS Error" in *Provide Pseudorange Measurement* message, or by RMS_ERR_PHASE or "RMS error in phase measurement" in *Provide Pilot Phase Measurement* message, or by "Pseudorange RMS Error" in *Provide GNSS Pseudorange Measurement* message, or by "Satellite Pseudodoppler RMS Error" in *Provide GNSS Pseudorange Measurement* message

Detailed description of the values listed in Table 1.6-1 is given in 1.6.1 through 1.6.2.2.

1.6.1 Evaluation of the Measurement Yield

Unless otherwise noted, the following general procedures apply:

1. A given test consists of a series of independent measurements.[12]
2. A measurement is declared a success if the mobile station returns at least N instances of a designated parameter type within time period T_2, where both N and T_2 are specified for each test. The designated parameter type is LAT/LONG or "Latitude/Longitude" in the *Provide Location Response* message, "Latitude/Longitude" in the *Provide Advanced Location Response* message, SV_CODE_PH_WH/SV_CODE_PH_FR or "Satellite code phase – whole chips/Satellite code phase – fractional chips" in the *Provide Pseudorange Measurement* message, "Code phase origin/Code phase" in the *Provide GNSS Pseudorange Measurement* message,

[10] PS_RANGE_RMS_ER and "Pseudorange RMS Error" of the *Provide Pseudorange Measurement* message are used interchangeably in this document.

[11] RMS_ERR_PHASE and "RMS error in phase measurement" of the *Provide Pilot Phase Measurement* message are used interchangeably in this document.

[12] In this document, 'measurement', when used in the context of position location, means the process that normally leads to obtaining a single position fix. The parameters returned by the mobile station during the course of a measurement (satellite code phase values, for example) themselves are not called measurements; they are called parameters or parameter values instead.

and PILOT_PN_PHASE or "Pilot measured phase" in the *Provide Pilot Phase Measurement* message.[13] A measurement is declared a failure if the mobile station returns M parameters, with $M < N$, within time period T_2. The start of time period T_2 is set as follows:

- For Position Location Test Modes 1 and 2, the start of the time period is at the occurrence of the action evoking the position location session origination by the mobile station. (For example, pressing the last key in the sequence to start an emergency call.)
- For Position Location Test Modes 3 and 4, the start of the time period is at the end of the transmission of the message containing the measurement request by the base station.

3. The designated parameter values returned by the mobile station, for which the mobile station indicated an error, are not counted towards *N*. See Table 1.6.2.1.1-1 for the list of error indications.

4. If the mobile station returns redundant information during a single measurement, i.e. it returns more than one LAT/LONG parameter or "Latitude/Longitude" parameter, or it returns more than one SV_CODE_PH_WH/SV_CODE_PH_FR parameter or "Satellite code phase – whole chips/Satellite code phase – fractional chips" parameter for the same satellite, or it returns more than one "Code phase origin/Code phase" parameter for the same satellite of a GNSS signal, or it returns more than one PILOT_PN_PHASE parameter or "Pilot measured phase" parameter for the same pilot, then only the first parameter for which the mobile station did not indicate an error will be counted towards *N*.

1.6.2 Evaluation of the returned parameters

The performance tests described in this document (i.e. all tests other than the protocol tests) require carrying out a statistical analysis of the parameter values returned by the mobile station. The statistical analysis is performed for each parameter type separately, on a subset of the returned values. The following will apply to the construction of these subsets:

---

[13] The mobile station always returns the values of LAT and LONG or "Latitude" and "Longitude" as a pair, and these values are evaluated jointly by the procedures described in this document. These two pairs of values are both considered a single parameter in this document designated by LAT/LONG and "Latitude/Longitude", respectively. Similarly, SV_CODE_PH_WH and SV_CODE_PH_FR, or "Satellite code phase – whole chips" and "Satellite code phase – fractional chips", are also returned as a pair. These two pairs are also considered to be a single parameter designated by SV_CODE_PH_WH/SV_CODE_PH_FR and "Satellite code phase – whole chips/Satellite code phase – fractional chips". Similarly, "Code phase origin" and "Code phase" are also returned as a pair. This pair is also considered to be a single parameter designated by "Code phase origin/Code phase".

- The parameter values returned by the mobile station, for which the mobile station indicated an error, are excluded from the statistical evaluation. See Table 1.6.2.1.1-1 for the list of error indications.
- If the mobile station returns redundant information during a single measurement, i.e. it returns more than one *Provide Location Response*, or it returns more than one *Provide Advanced Location Response,* or it returns more than one satellite code phase record for the same satellite in *Provide Pseudorange Measurement* messages, or it returns more than one satellite code phase record for the same satellite of a GNSS signal in *Provide GNSS Pseudorange Measurement* messages, or it returns more than one pilot phase record for the same pilot in *Provide Pilot Phase Measurement* messages, then only the first message or record, for which the mobile station did not indicate an error, will be included in the statistical evaluation. See Table 1.6.2.1.1-1 for the list of error indications.
- The parameters returned by the mobile station after the expiration of specified time period T_2 will be excluded from the evaluation.
- If the mobile station returns more than N non-redundant parameters (i.e. parameters corresponding to distinct satellites or base stations) within time period T_2, then all the returned parameters that have no error indications will be included in the evaluation. See Table 1.6.2.1.1-1 for the list of error indications.

1.6.2.1 Evaluation with σ_1, σ_2 and σ_1, $\sigma_{80\%}$ Type Tests

For all tested data fields, except for the returned RMS error estimate, a σ_1, σ_2 or σ_1, $\sigma_{80\%}$ type test is performed. The σ_1, σ_2 and σ_1, $\sigma_{80\%}$ type tests comprise the following steps:

1. For each returned parameter, in each measurement, a non-negative error value ε is determined. The calculation of this error value for successful measurements is described in 1.6.2.1.1. For failed measurements, where M valid parameters were returned within time period T_2, with $M < N$, ε is set to any value greater than σ for each of the $N - M$ missing parameters. For failed measurements in *Provide GNSS Pseudorange Measurement* of GNSS dynamic range test σ is $\sigma_{80\%}$, the 80% point defined below. For failed measurements other than those in *Provide GNSS Pseudorange Measurement* of GNSS dynamic range test σ is σ_2, the 95% point defined below.
2. If the mobile station returns parameter values corresponding to satellite or base station signals that were not simulated during the measurement, then for those parameters, the error is set to any value greater than σ. For parameters in *Provide GNSS Pseudorange Measurement* of GNSS dynamic range test σ is $\sigma_{80\%}$, the 80% point defined below. For parameters other than those in *Provide GNSS Pseudorange Measurement* of GNSS dynamic range test σ is σ_2, the 95% point defined below.
3. The mobile station is declared compliant with the minimum specification if the collected measurement results establish $P(\varepsilon < \sigma_1) > 0.67$ and $P(\varepsilon < \sigma) > p$ with a given confidence level for all tested parameter types; where threshold levels σ_1 and σ are

specified for each parameter type for a given test, and the confidence level will be 90% unless otherwise stated. For parameters in *Provide GNSS Pseudorange Measurement* of GNSS dynamic range test σ is $\sigma_{80\%}$ and $p = 0.8$. For parameters other than those in *Provide GNSS Pseudorange Measurement* of GNSS dynamic range test σ is σ_2 and $p = 0.95$. See Annex D for the description of the recommended method of statistical evaluation.

Hereinafter, the test method described in this paragraph will be called a σ_1, σ_2 type test or a σ_1, $\sigma_{80\%}$ type test.

1.6.2.1.1 Error Calculation

Unless specified otherwise, error ε is calculated as the absolute value of the difference between the returned parameter value and the true parameter value. Whenever a given parameter represents a vector (for example, horizontal position), the magnitude of the vector difference is taken. True parameter value, in this context, means a best estimate of the physical parameter value observable by the mobile station. The true value can be generated by interpolating between reference data sample points provided by the test equipment (for example, recorded reference SV-to-user range provided by the GPS and GNSS simulators). Alternatively, the true value can be independently computed with an appropriate algorithm, based on the test scenario parameters. These or other methods for determining the true value are acceptable provided that all test equipment requirements listed in 6 are met.

The returned parameter fields and corresponding error indications are listed in Table 1.6.2.1.1-1.

Table 1.6.2.1.1-1 Returned Parameter Fields and Corresponding Error Indications

MS Response	Returned Parameter Field	Error Indication	Note
Provide Pseudorange Measurement	SV_CODE_PH_WH	PS_RANGE_RMS_ER or "Pseudorange RMS error" = '111111'	See 1.6.2.1.1.1, 1.6.2.1.1.2
	SV_CODE_PH_FR		
	PS_DOPPLER	PS_RANGE_RMS_ER or "Pseudorange RMS error" = '111111'	See 1.6.2.1.1.3
	SV_CNO	PS_RANGE_RMS_ER or "Pseudorange RMS error" = '111111'	See 1.6.2.1.1.4
Provide Pilot Phase Measurement	PILOT_PN_PHASE	RMS_ERR_PHASE or "RMS error in phase measurement" = '111111'	See 1.6.2.1.1.5
	REF_PILOT_STRENGTH	RMS_ERR_PHASE or "RMS error in phase measurement" = '111111'	See 1.6.2.1.1.4
	TOTAL_RX_POWER	RMS_ERR_PHASE or "RMS error in phase measurement" = '111111'	See 1.6.2.1.1.4
	PILOT_STRENGTH	RMS_ERR_PHASE or "RMS error in phase measurement" = '111111'	See 1.6.2.1.1.4
Provide Location Response	LAT	LOC_UNCRTNTY_A or "Standard deviation of axis along angle specified for position uncertainty" = '11110' or '11111' or LOC_UNCRTNTY_P or "Standard deviation of axis perpendicular to angle specified for position uncertainty" = '11110' or '11111'	See 1.6.2.1.1.6
	LONG		

Provide GNSS Pseudorange Measurement	Code Phase origin	Pseudorange RMS Error = '111111'	See 1.6.2.1.1.1, 1.6.2.1.1.2
	Code Phase		
	Satellite Pseudodoppler	Satellite Pseudodoppler RMS Error = '111111'	See 1.6.2.1.1.3
	Satellite C/No	Pseudorange RMS Error = '111111'	See 1.6.2.1.1.4
Provide Advanced Location Response	Latitude	Magnitude of error along angle specified for horizontal location uncertainty = '62' or '63' or Magnitude of error perpendicular to angle specified for horizontal location uncertainty = '62' or '63'	See 1.6.2.1.1.6
	Longitude		

1

2 1.6.2.1.1.1 Calculation of Absolute Satellite Code Phase Error

3 Satellite code phase values with error indications are discarded (see Table 1.6.2.1.1-1 for
4 the list of error indications).

5 The absolute satellite code phase error represents the mobile station's measurement quality
6 prior to the PDE operating on the measurements. This can also be referred to as the raw
7 performance. The relative satellite code phase error represents the consistency of values
8 returned for each satellite within a single measurement. The limits placed on the absolute
9 and relative satellite code phase errors, together, define a level of performance equivalent to
10 that defined by the LAT/LONG and 'Latitude/Longitude' requirements.

11 The absolute satellite code phase error $\delta_{i,j}$ is obtained as $\delta_{i,j} = \left| e_{i,j} \right|$, where for GPS tests
12 in sections other than 3, $e_{i,j}$ is defined as[14] $e_{i,j} = \begin{cases} \rho_{i,j} + 1023, \text{ if } \rho_{i,j} < -511 \\ \rho_{i,j} - 1023, \text{ if } \rho_{i,j} > 511 \\ \rho_{i,j} \quad , \text{ otherwise} \end{cases}$, with $\rho_{i,j}$

[14] This definition accommodates for the periodic nature of the GPS C/A code. The C/A code sequence has a period of 2^{10}-1= 1023 chips.

calculated as $\rho_{i,j} = \hat{r}_{i,j} - r_j(t_i) - C_{GPS} \cdot (-\frac{MSTO_i}{16 \cdot C_{CDMA}} + \Delta T)$, where C_{GPS}=1.023 Mcps is the GPS C/A code chip rate, C_{CDMA}=1.2288 Mcps is the CDMA chip rate, i is the measurement index, j is the satellite index, $\hat{r}_{i,j}$ is the satellite code phase value returned by the mobile station and $r_j(t_i)$ is the true satellite code phase value at GPS time t_i, where t_i is derived from the returned TIME_REF field (expressed in CDMA system time) corresponding to the measurement; $MSTO_i$ is the value of the MOB_SYS_T_OFFSET field reported by the mobile station for the ith measurement, and ΔT is the independently measured base station to GPS simulator timing offset (see 6.6). An advance in base station system time relative to GPS simulator system time is represented by a positive ΔT value. If OFFSET_INCL is set to '0' by the mobile station, then $MSTO_i = 0$ assignment is used. For GNSS tests in 3, the absolute satellite code phase error $\delta_{i,j}$ is obtained as $\delta_{i,j} = |e_{i,j}|$ nanoseconds, where $e_{i,j}$ is defined as

$$e_{i,j} = \begin{cases} \rho_{i,j} + 10^6, \text{ if } \rho_{i,j} < -5 \times 10^5 \\ \rho_{i,j} - 10^6, \text{ if } \rho_{i,j} > 5 \times 10^5 \\ \rho_{i,j}, \text{ otherwise} \end{cases}$$

, with $\rho_{i,j}$ calculated as $\rho_{i,j} = \hat{r}_{i,j} - r_j(t_i) + \frac{MSTO_i \cdot 10^9}{16 \cdot C_{CDMA}} - \Delta T_{GNSS}$, where C_{CDMA}=1.2288 Mcps is the CDMA chip rate, where i is the measurement index, j is the satellite index, $\hat{r}_{i,j}$ is the satellite code phase value in nanoseconds returned by the mobile station and $r_j(t_i)$ is the true satellite code phase value in nanoseconds at reference time t_i, where t_i is derived from the returned 'Reference Time' field corresponding to the measurement. $MSTO_i$ is the value of the "Mobile station system time offset" field reported by the mobile station for the ith measurement. ΔT_{GNSS} is the independently measured base station to GNSS simulator timing offset in nanoseconds (see 6.8). An advance in base station system time relative to GNSS simulator system time is represented by a positive ΔT_{GNSS} value.

Note, ΔT and ΔT_{GNSS} shown in the equations above represents a correction for a certain type of test equipment inaccuracy. Other inaccuracies (for example, unequal cable length connecting the mobile station to the GPS or GNSS simulator and the base station) may be corrected for in a similar fashion. However, if any or all of these corrections were already applied as part of the determination of the true parameter value, then those corrections shall not be applied here.

1.6.2.1.1.2 Calculation of Relative Satellite Code Phase Error

Satellite code phase values with error indications are discarded (see Table 1.6.2.1.1-1 for the list of error indications). The relative satellite code phase error $\delta'_{i,j}$ is obtained as $\delta'_{i,j} = \left|\tilde{e}_{i,j}\right|$, where $\tilde{e}_{i,j}$ is calculated as $\tilde{e}_{i,j} = e_{i,j} - \bar{e}_i$, where the $e_{i,j}$ are obtained as explained above, and $\bar{e}_i$ is the mean error, calculated as $\bar{e}_i = \frac{1}{l_i}\sum_{j=1}^{l_i} e_{i,j}$, where l_i is the number of satellite code phase values returned by the mobile station for the ith measurement.

1.6.2.1.1.3 Calculation of Pseudo Doppler Error

Pseudo Doppler values with error indications are discarded (see Table 1.6.2.1.1-1 for the list of error indications). The pseudo Doppler error $\gamma'_{i,j}$ is obtained as $\gamma'_{i,j} = \left|\tilde{d}_{i,j}\right|$; where $\tilde{d}_{i,j}$ is calculated as $\tilde{d}_{i,j} = d_{i,j} - \bar{d}_i$, where $d_{i,j}$ is the difference between the returned pseudo Doppler value and the true Doppler value at time t_i, where t_i is derived from the returned TIME_REF field corresponding to the measurement; and $\bar{d}_i$ is the mean error, calculated as $\bar{d}_i = \frac{1}{l_i}\sum_{j=1}^{l_i} d_{i,j}$, where l_i is the number of pseudo Doppler values returned by the mobile station for the ith measurement.

1.6.2.1.1.4 Calculation of Signal-to-Noise Ratio and Signal Strength Errors

Signal-to-noise ratio and signal strength values with error indications are discarded (see Table 1.6.2.1.1-1 for the list of error indications). Signal-to-noise ratio and signal strength estimation errors are obtained as the absolute value of the difference between the reported value and the true value, both expressed in units given by the corresponding field definition of [1].

1.6.2.1.1.5 Calculation of Pilot Phase Error

Pilot phase values with error indications are discarded (see Table 1.6.2.1.1-1 for the list of error indications). The pilot phase error $\mu_{i,j}$ is obtained as $\mu_{i,j} = \left|m_{i,j}\right|$, where $m_{i,j}$ is defined as[15] $m_{i,j} = \begin{cases} \zeta_{i,j} + 2^{15}, \text{ if } \zeta_{i,j} < -2^{14} \\ \zeta_{i,j} - 2^{15}, \text{ if } \zeta_{i,j} > 2^{14} \\ \zeta_{i,j}, \text{ otherwise} \end{cases}$, with $\zeta_{i,j}$ calculated as $\zeta_{i,j} = \hat{p}_{i,j} - p_j(t_i) + MSTO_i/16 - C_{CDMA} \cdot \Delta T_j$; where C_{CDMA}=1.2288 Mcps is the CDMA chip

[15] This definition accommodates for the periodic nature of the CDMA pilot PN code. The pilot PN code sequence has a period of 2^{15}= 32768 chips.

rate, i is the measurement index, j is the base station index, $\hat{p}_{i,j}$ is the pilot phase value returned by the mobile station, and $p_j(t_i)$ is the true pilot phase value at time t_i, where t_i is the timestamp derived from the TIME_REF_MS field value for the ith measurement; $MSTO_i$ is the value of the MOB_SYS_T_OFFSET field reported by the mobile station for the ith measurement, and ΔT_j is the independently measured timing offset between base station j (whose pilot phase is being reported) and the serving base station (see 6.4.2). An advance in base station system time relative to the serving base station system time is represented by a positive ΔT_j value. If OFFSET_INCL is set to '0' by the mobile station, then $MSTO_i = 0$ assignment is used.

Note, ΔT_j shown in the equation above represents a correction for a certain type of test equipment inaccuracy. Other inaccuracies (for example, unequal cable length connecting the mobile station to the different base stations) may be corrected for in a similar fashion. However, if any or all of these corrections were already applied as part of the determination of the true parameter value, then those corrections shall not be applied here.

1.6.2.1.1.6 Calculation of Horizontal Position Error

Returned horizontal position values corresponding to Latitude and Longitude values that were indicated as erroneous by the mobile station according to Table 1.6.2.1.1-1 are not counted towards N and are discarded from the statistical evaluation. A horizontal position error is calculated as the magnitude of the difference vector between the reported and the nominal 2D positions, all expressed in units of 1 m.

1.6.2.2 Evaluation of the Returned RMS Error Estimates

The RMS error estimate returned by the mobile station is evaluated as follows:

1. All returned values for a given parameter type (satellite code phase or pilot phase), excluding the values for which there was an error indication, are collected during the ith measurement to give $x_{i,1}, x_{i,2}, \cdots, x_{i,l_i}$, where l_i is the total number of valid parameter values (satellite code phase or pilot phase) returned by the mobile station during the ith measurement.
2. For each value $x_{i,j}$, an error value $\eta_{i,j}$ is calculated. For satellite code phase values, $\eta_{i,j}$ is assigned as $\eta_{i,j} = \tilde{e}_{i,j}$, while for pilot phase values, $\eta_{i,j}$ is assigned as $\eta_{i,j} = m_{i,j}$, where the $\tilde{e}_{i,j}$ and $m_{i,j}$ are calculated according to the description in 1.6.2.1.1.
3. For each $\eta_{i,j}$, $\tilde{\eta}_{i,j}$ is calculated as $\tilde{\eta}_{i,j} = \eta_{i,j} - \overline{\eta}$, where $\overline{\eta}$ is the mean, calculated as $\overline{\eta} = \frac{1}{K}\sum_{i=1}^{K}\left(\frac{1}{l_i}\sum_{j=1}^{l_i}\eta_{i,j}\right)$, where K is the total number of measurements.

4. Each error value $\tilde{\eta}_{i,j}$ is normalized[16] by dividing it with the corresponding RMS error estimate $RMS_{i,j}$ returned by the mobile station, to get $\eta'_{i,j} = \frac{\tilde{\eta}_{i,j}}{RMS_{i,j}}$. The returned RMS error estimate parameter fields and the corresponding error indications are listed in Table 1.6.2.2-1.

Table 1.6.2.2-1 Returned RMS Error Estimate Parameter Fields and Corresponding Error Indications

MS Response	Parameter Field	Error Indication
Provide Pseudorange Measurement	PS_RANGE_RMS_ER	PS_RANGE_RMS_ER = '111111'
Provide Pilot Phase Measurement	RMS_ERR_PHASE	RMS_ERR_PHASE = '111111'
Provide GNSS Pseudorange Measurement	Pseudorange RMS Error	Pseudorange RMS Error = '111111'
	Satellite Pseudodoppler RMS Error	Satellite Pseudodoppler RMS Error = '111111'

5. The average normalized RMS error R is calculated as $R = \sqrt{\frac{1}{K}\sum_{i=1}^{K}\left(\frac{1}{l_i}\sum_{j=1}^{l_i}{\eta'_{i,j}}^2\right)}$.

The mobile station is declared compliant with the minimum specification if $R_1 \le R \le R_2$ is satisfied, where threshold levels R_1 and R_2 are specified for each test.

[16] The resulting random variable $\eta'_{i,j}$ would have unit variance with a perfect returned RMS error estimate.

2 GPS MINIMUM SPECIFICATIONS

The tests described in this section shall be performed for GPS capable mobile stations. GPS capable mobile stations may return *Provide Pseudorange Measurement* messages or *Provide Location Response* messages. For a mobile station that is capable of returning *Provide Pseudorange Mesaurement* messages, the parameter fields of that message will be tested. For a mobile station that is capable of returning *Provide Location Response* messages, the parameter fields of that message will be tested. The following comments apply to all GPS test cases:

- The serving base station pilot PN offset corresponds directly to PILOT_PN in the *Sync Channel Message* and to REF_PN in the PDE simulator GPS assistance messages.
- The serving base station power is set to $\hat{I}_{or}$= -70 dBm.
- The simulated locations (not the actual physical locations) of the mobile station and the serving base station are as follows: In the stationary and protocol tests, the serving base station is due north from the mobile station at a distance of $5/\sqrt{3}$ km. In the moving scenario test, the mobile station's trajectory is circular in the horizontal plane, with a radius of 1 km centered at the serving base station location. See Annex B for detailed location data.
- The limit values for each measurement parameter represent an interpretation of the returned values with the units stated and are not the actual returned binary values.

2.1 GPS Performance Specifications

The performance specifications described in this section set a minimum acceptable level of accuracy for the GPS based measurements returned by the mobile station under various test conditions.

2.1.1 Stationary Location Tests

In stationary location tests, the signal environment is set such that a stationary mobile station location is simulated.

2.1.1.1 GPS Accuracy Test

2.1.1.1.1 Definition

The purpose of this test is to determine the mobile station's capability to obtain precise GPS measurements under favorable signal conditions and good satellite geometry. The GPS simulator shall provide high SNR signals representing eight satellites with HDOP less than 1.6. Note that the GPS assistance provided by the serving base station is not limited to eight satellites during this test. A sequence of independent measurements is carried out. In each measurement, the mobile station shall return a *Provide Location Response* message if the mobile station is capable of location computation; or it shall return one or more *Provide Pseudorange Measurement* messages if it is not capable of location computation. The test may be stopped when the required confidence levels are met for all tested parameters.

2.1.1.1.2 Method of Measurement

1. Connect a base station simulator and a GPS simulator to the mobile station as shown in Figure 6.12.1-1.
2. For each band class that the mobile station supports, configure the mobile station to operate in that band class and perform steps 3 through 13.
3. Configure the base station according to the standard test parameters listed in 6.12.2.
4. Configure the GPS simulator according to the standard test parameters listed in Annex B.
5. Set the GPS simulator output levels according to Table 2.1.1.1.2-1. Satellites not listed in Table 2.1.1.1.2-1 shall not be simulated.

Table 2.1.1.1.2-1 Satellite Signal Levels for the GPS Accuracy Test

Satellite PRN Number	Signal Level (dBm)	C/N_0 (dB-Hz)
3, 14, 15, 17, 18, 21, 29, 31	-130	44

6. Measure and record the time offset between the base station and the GPS simulator time base (see 6.7).
7. Repeat Steps 8 through 13.
8. Power up the mobile station.
9. Reset previous measurements, computed positions, values calculated during previous fixes and GPS system time.
10. Initiate a mobile terminated voice call.
11. Initiate a Test Mode 4 session.
12. Record the values returned by the mobile station.
13. Power down the mobile station.

2.1.1.1.3 Minimum Specification

The parameters returned by the mobile station shall satisfy the requirements listed in Table 2.1.1.1.3-1; the confidence level for all σ_1, σ_2 type tests shall be 90% (see also 1.6).

Table 2.1.1.1.3-1 Minimum Specifications for the GPS Accuracy Test

Mobile Station Response	Parameter Field	Limit Parameter	Limit Value
Provide MS Information	N/A	T_1	750 ms
Provide Pseudorange Measurement	SV_CODE_PH_WH SV_CODE_PH_FR	N	4
		T_2	16 s
		$CODE_{1R}$	0.05 GPS chips
		$CODE_{2R}$	0.15 GPS chips
		$CODE_{1A}$	0.22 GPS chips
		$CODE_{2A}$	0.32 GPS chips
	PS_DOPPLER	DPR_1	30 Hz
		DPR_2	50 Hz
	SV_CNO	CNO_1	4 dB-Hz
		CNO_2	6 dB-Hz
	PS_RANGE_RMS_ER	R_1	0
		R_2	3
Provide Location Response	LAT LONG	N	1
		T_2	16 s
		$LATLONG_1$	25 m
		$LATLONG_2$	75 m

2.1.1.2 GPS Dynamic Range Test

2.1.1.2.1 Definition

The purpose of this test is to determine the mobile station's capability to obtain precise GPS measurements under variable (strong to weak) signal conditions while stationary. The test covers signal strength ranging from -125 dBm to –146 dBm. The GPS simulator shall provide signals representing eight satellites with HDOP less than 1.6. Note that the GPS assistance provided by the serving base station is not limited to eight satellites during this test. A sequence of independent measurements is carried out. In each measurement, the mobile station shall return a *Provide Location Response* message if the mobile station is capable of location computation; or it shall return one or more *Provide Pseudorange Measurement* messages if it is not capable of location computation. The test may be stopped when the required confidence levels are met for all tested parameters.

2.1.1.2.2 Method of Measurement

1. Connect a base station simulator and a GPS simulator to the mobile station as shown in Figure 6.12.1-1.
2. For each band class that the mobile station supports, configure the mobile station to operate in that band class and perform steps 3 through 13.
3. Configure the base station according to the standard test parameters listed in 6.12.2.
4. Configure the GPS simulator according to the standard test parameters listed in Annex B.
5. Set the GPS simulator output levels according to Table 2.1.1.2.2-1. Satellites not listed in Table 2.1.1.2.2-1 shall not be simulated.

Table 2.1.1.2.2-1 Satellite Signal Levels for the GPS Dynamic Range Test

Satellite PRN Number	Signal Level (dBm)	C/N_0 (dB-Hz)
3	-125	49
14	-128	46
15	-131	43
17	-134	40
29	-137	37
31	-140	34
21	-143	31
18	-149	25

6. Measure and record the time offset between the base station and the GPS simulator time base (see 6.7).
7. Repeat Steps 8 through 13.
8. Power up the mobile station.
9. Reset previous measurements, computed positions, values calculated during previous fixes and GPS system time.
10. Initiate a mobile terminated voice call.
11. Initiate a Test Mode 4 session.
12. Record the values returned by the mobile station.
13. Power down the mobile station.

2.1.1.2.3 Minimum Specification

The parameters returned by the mobile station shall satisfy the requirements listed in Table 2.1.1.2.3-1; the confidence level for all σ_1, σ_2 type tests shall be 90% (see also 1.6).

Table 2.1.1.2.3-1 Minimum Specifications for the GPS Dynamic Range Test

Mobile Station Response	Parameter Field	Limit Parameter	Limit Value
Provide MS Information	N/A	T_1	750 ms
Provide Pseudorange Measurement	SV_CODE_PH_WH SV_CODE_PH_FR	N	8
		T_2	32 s
		$CODE_{1R}$	0.1 GPS chips
		$CODE_{2R}$	0.3 GPS chips
		$CODE_{1A}$	0.3 GPS chips
		$CODE_{2A}$	0.6 GPS chips
	PS_DOPPLER	DPR_1	40 Hz
		DPR_2	80 Hz
	SV_CNO	CNO_1	4 dB-Hz
		CNO_2	6 dB-Hz
	PS_RANGE_RMS_ER	R_1	0
		R_2	3
Provide Location Response	LAT LONG	N	1
		T_2	16 s
		$LATLONG_1$	50 m
		$LATLONG_2$	150 m

2.1.1.3 GPS Sensitivity Test

2.1.1.3.1 Definition

The purpose of this test is to determine the mobile station's capability to obtain GPS measurements under weak satellite signal conditions. The GPS simulator shall provide low SNR signals representing four satellites with HDOP less than 2.1. Note that the GPS assistance provided by the serving base station is not limited to four satellites during this test. A sequence of independent measurements is carried out. In each measurement, the mobile station shall return a *Provide Location Response* message if the mobile station is capable of location computation; or it shall return one or more *Provide Pseudorange*

Measurement messages if it is not capable of location computation. The test may be stopped when the required confidence levels are met for all tested parameters.

2.1.1.3.2 Method of Measurement

1. Connect a base station simulator and a GPS simulator to the mobile station as shown in Figure 6.12.1-1.
2. For each band class that the mobile station supports, configure the mobile station to operate in that band class and perform steps 3 through 13.
3. Configure the base station according to the standard test parameters listed in 6.12.2.
4. Configure the GPS simulator according to the standard test parameters listed in Annex B.
5. Set the GPS simulator output levels according to Table 2.1.1.3.2-1. Satellites not listed in Table 2.1.1.3.2-1 shall not be simulated.

Table 2.1.1.3.2-1 Satellite Signal Levels for the GPS Sensitivity Test

Satellite PRN Number	Signal Level (dBm)	C/N_0 (dB-Hz)
14, 17, 21, 31	-149	25

6. Measure and record the time offset between the base station and the GPS simulator time base (see 6.7).
7. Repeat Steps 8 through 13.
8. Power up the mobile station.
9. Reset previous measurements, computed positions, values calculated during previous fixes and GPS system time.
10. Initiate a mobile terminated voice call.
11. Initiate a Test Mode 4 session.
12. Record the values returned by the mobile station.
13. Power down the mobile station.

2.1.1.3.3 Minimum Specification

The parameters returned by the mobile station shall satisfy the requirements listed in Table 2.1.1.3.3-1; the confidence level for all σ_1, σ_2 type tests shall be 90% (see also 1.6).

Table 2.1.1.3.3-1 Minimum Specifications for the GPS Sensitivity Test

Mobile Station Response	Parameter Field	Limit Parameter	Limit Value
Provide MS Information	N/A	T_1	750 ms
Provide Pseudorange Measurement	SV_CODE_PH_WH SV_CODE_PH_FR	N	4
		T_2	16 s
		$CODE_{1R}$	0.11 GPS chips
		$CODE_{2R}$	0.33 GPS chips
		$CODE_{1A}$	0.31 GPS chips
		$CODE_{2A}$	0.63 GPS chips
	PS_DOPPLER	DPR_1	40 Hz
		DPR_2	80 Hz
	SV_CNO	CNO_1	4 dB-Hz
		CNO_2	6 dB-Hz
	PS_RANGE_RMS_ER	R_1	0
		R_2	3
Provide Location Response	LAT LONG	N	1
		T_2	16 s
		$LATLONG_1$	60 m
		$LATLONG_2$	180 m

2.1.1.4 GPS Multipath Accuracy Test

2.1.1.4.1 Definition

The purpose of this test is to determine the mobile station's capability to obtain precise GPS measurements under a simple, two-ray GPS multipath environment and good satellite geometry. The GPS simulator shall provide signals representing a total of five satellites with HDOP less than 1.7. Two separate GPS signals shall be produced for three of the five GPS satellites being simulated and presented to the mobile station under test, one representing an attenuated, direct path and one representing a higher amplitude, delayed multipath signal. Note that the GPS assistance provided by the serving base station is not limited to five satellites during this test. A sequence of independent measurements is carried out. In each measurement, the mobile station shall return a *Provide Location Response* message if the mobile station is capable of location computation; or it shall return one or more *Provide Pseudorange Measurement* messages if it is not capable of location

computation. The test may be stopped when the required confidence levels are met for all tested parameters.

2.1.1.4.2 Method of Measurement

1. Connect a base station simulator and a GPS simulator to the mobile station as shown in Figure 6.12.1-1.
2. For each band class that the mobile station supports, configure the mobile station to operate in that band class and perform steps 3 through 13.
3. Configure the base station according to the standard test parameters listed in 6.12.2.
4. Configure the GPS simulator according to the standard test parameters listed in Annex B. The Doppler shift of the multipath signal relative to the direct signal shall be in the range of 0.1 Hz t 0.5 Hz.
5. Set the GPS simulator output levels according to Table 2.1.1.4.2-1. Satellites not listed in Table 2.1.1.4.2-1 shall not be simulated.

Table 2.1.1.4.2-1 Satellite Signal Levels for the GPS Multipath Accuracy Test

Satellite PRN Number	Signal Level (dBm)	C/N_0 (dB-Hz)	Initial Delay (GPS Chips)
14, 17, 18	-144	30	0
14, 17, 18	-141	33	2
21, 31	-141	33	0

6. Measure and record the time offset between the base station and the GPS simulator time base (see 6.7).
7. Repeat Steps 8 through 13.
8. Power up the mobile station.
9. Reset previous measurements, computed positions, values calculated during previous fixes and GPS system time.
10. Initiate a mobile terminated voice call.
11. Initiate a Test Mode 4 session.
12. Record the values returned by the mobile station.
13. Power down the mobile station.

2.1.1.4.3 Minimum Specification

The parameters returned by the mobile station shall satisfy the requirements listed in Table 2.1.1.4.3-1; the confidence level for all σ_1, σ_2 type tests shall be 90% (see also 1.6).

Table 2.1.1.4.3-1 Minimum Specifications for the GPS Multipath Accuracy Test

Mobile Station Response	Parameter Field	Limit Parameter	Limit Value
Provide MS Information	N/A	T_1	750 ms
Provide Pseudorange Measurement	SV_CODE_PH_WH SV_CODE_PH_FR	N	4
		T_2	16 s
		$CODE_{1R}$	0.11 GPS chips
		$CODE_{2R}$	0.33 GPS chips
		$CODE_{1A}$	0.31 GPS chips
		$CODE_{2A}$	0.63 GPS chips
	PS_DOPPLER	DPR_1	35 Hz
		DPR_2	70 Hz
	SV_CNO	CNO_1	4 dB-Hz
		CNO_2	6 dB-Hz
	PS_RANGE_RMS_ER	R_1	0
		R_2	3
Provide Location Response	LAT LONG	N	1
		T_2	16 s
		$LATLONG_1$	60 m
		$LATLONG_2$	180 m

2.1.2 Moving Scenario Test

2.1.2.1 Moving Scenario GPS Accuracy Test

2.1.2.1.1 Definition

The purpose of this test is to determine the mobile station's capability to obtain precise GPS measurements under favorable signal conditions, when the mobile station is in motion. The mobile station's trajectory is circular in the horizontal plane, with a radius of 1 km. The mobile station's speed is constant at 100 km/h. The GPS simulator shall provide high SNR signals representing eight satellites with HDOP less than 1.6. Note that the GPS assistance provided by the serving base station is not limited to eight satellites during this test. A sequence of independent measurements is carried out. In each measurement, the mobile station shall return a *Provide Location Response* message if the mobile station is capable of location computation; or it shall return one or more *Provide Pseudorange*

Measurement messages if it is not capable of location computation. The test may be stopped when the required confidence levels are met for all tested parameters.

2.1.2.1.2 Method of Measurement

1. Connect a base station simulator and a GPS simulator to the mobile station as shown in Figure 6.12.1-1.
2. For each band class that the mobile station supports, configure the mobile station to operate in that band class and perform steps 3 through 13.
3. Configure the base station according to the standard test parameters listed in 6.12.2.
4. Configure the GPS simulator according to the standard test parameters listed in Annex B.
5. Set the GPS simulator output levels according to Table 2.1.2.1.2-1. Satellites not listed in Table 2.1.2.1.2-1 shall not be simulated.

Table 2.1.2.1.2-1 Satellite Signal Levels for the Moving Scenario GPS Accuracy Test

Satellite PRN Number	Signal Level (dBm)	C/No (dB-Hz)
3, 14, 15, 17, 18, 21, 29, 31	-130	44

6. Measure and record the time offset between the base station and the GPS simulator time base (see 6.7).
7. Repeat Steps 8 through 13.
8. Power up the mobile station.
9. Reset previous measurements, computed positions, values calculated during previous fixes and GPS system time.
10. Initiate a mobile terminated voice call.
11. Initiate a Test Mode 4 session.
12. Record the values returned by the mobile station.
13. Power down the mobile station.

2.1.2.1.3 Minimum Specification

The parameters returned by the mobile station shall satisfy the requirements listed in Table 2.1.2.1.3-1; the confidence level for all σ_1, σ_2 type tests shall be 90% (see also 1.6).

Table 2.1.2.1.3-1 Minimum Specifications for the Moving Scenario GPS Accuracy Test

Mobile Station Response	Parameter Field	Limit Parameter	Limit Value
Provide MS Information	N/A	T_1	750 ms
Provide Pseudorange Measurement	SV_CODE_PH_WH SV_CODE_PH_FR	N	4
		T_2	16 s
		$CODE_{1R}$	0.07 GPS chips
		$CODE_{2R}$	0.22 GPS chips
		$CODE_{1A}$	0.4 GPS chips
		$CODE_{2A}$	0.7 GPS chips
	PS_DOPPLER	DPR_1	35 Hz
		DPR_2	70 Hz
	SV_CNO	CNO_1	4 dB-Hz
		CNO_2	6 dB-Hz
	PS_RANGE_RMS_ER	R_1	0
		R_2	3
Provide Location Response	LAT LONG	N	1
		T_2	16 s
		$LATLONG_1$	35 m
		$LATLONG_2$	105 m

2.2 GPS Protocol Tests

The protocol tests presented in this section shall be performed if the tests listed in 4.3 (AFLT Protocol Tests) are not performed.

2.2.1 GPS Position Location Session on the Paging Channel Test

2.2.1.1 Definition

The purpose of this test is to determine the mobile station's capability to operate in a mode when the base station initiates a position location session on the Paging Channel.

2.2.1.2 Method of Measurement

1. Connect a base station simulator and a GPS simulator to the mobile station as shown in Figure 6.12.1-1.
2. Configure the mobile station to operate in a band class it supports.

3. Configure the base station according to the standard test parameters listed in 6.12.2.
4. Configure the GPS simulator according to the standard test parameters listed in Annex B.
5. Set the GPS simulator output levels according to Table 2.2.1.2-1. Satellites not listed in Table 2.2.1.2-1 shall not be simulated.

Table 2.2.1.2-1 Satellite Signal Levels for the Protocol Tests

Satellite PRN Number	Signal Level (dBm)	C/No (dB-Hz)
3, 14, 15, 17, 18, 21, 29, 31	-130	44

6. Power up the mobile station.
7. Reset previous measurements, computed positions, values calculated during previous fixes and GPS system time.
8. Initiate a mobile terminated voice call.
9. Initiate a Test Mode 3 session.
10. Record the values returned by the mobile station.
11. Power down the mobile station.

2.2.1.3 Minimum Specification

The mobile station shall respond to base station requests received on the Paging Channel and it shall complete the position location session by returning a *Provide Location Response* message if the mobile station is capable of location computation; or it shall return one or more *Provide Pseudorange Measurement* messages if it is not capable of location computation. The parameters returned by the mobile station shall satisfy the requirements listed in Table 2.2.1.3-1 (see also 1.6).

Table 2.2.1.3-1 Minimum Specifications for the GPS Position Location Session on the Paging Channel Test

Mobile Station Response	Parameter Field	Limit Parameter	Limit Value
Provide Pseudorange Measurement	SV_CODE_PH_WH SV_CODE_PH_FR	N	4
		T_2	16 s
Provide Location Response	LAT LONG	N	1
		T_2	16 s

2.2.2 Mobile Station Originated GPS Position Location Session Test

These tests shall only be applied to mobile stations that support mobile station originated position location sessions.

2.2.2.1 Access Channel Test

2.2.2.1.1 Definition

This test shall be only applied to mobile stations that support position location session origination on the Access Channel. The purpose of this test is to determine the mobile station's capability to operate in a mode where the position location session is originated by the mobile station

2.2.2.1.2 Method of Measurement

1. Connect a base station simulator and a GPS simulator to the mobile station as shown in Figure 6.12.1-1.
2. Configure the mobile station to operate in a band class it supports.
3. Configure the base station according to the standard test parameters listed in 6.12.2.
4. Configure the GPS simulator according to the standard test parameters listed in Annex B.
5. Set the GPS simulator output levels according to Table 2.2.1.2-1. Satellites not listed in Table 2.2.1.2-1 shall not be simulated.
6. Power up the mobile station.
7. Reset previous measurements, computed positions, values calculated during previous fixes and GPS system time.
8. Initiate a Test Mode 1 session.
9. Record the values returned by the mobile station or the computed location stored in the mobile station.
10. Power down the mobile station.

2.2.2.1.3 Minimum Specification

The mobile station shall complete the position location session by returning one or more *Provide Pseudorange Measurement* messages if it is not capable of location computation or by computing its own location otherwise.

Note, if the mobile station is capable of location computation, it may return neither pseudorange measurement values nor the calculated position during this test. In this case the calculated position shall be retrieved from the mobile station by other means (for example, through the data port).

The parameters returned or computed by the mobile station shall satisfy the requirements listed in Table 2.2.2.1.3-1 (see also 1.6).

Note, time limit T_2 applies to the measurement time period that starts when the position location session is invoked at the mobile station.

Table 2.2.2.1.3-1 Minimum Specifications for the Mobile Station Originated GPS Position Location Session Tests

Mobile Station Response	Parameter Field	Limit Parameter	Limit Value
Provide Pseudorange Measurement	SV_CODE_PH_WH SV_CODE_PH_FR	N	4
		T_2	16 s
Computed Mobile Station Location	N/A	N	1
		T_2	16 s

2.2.2.2 Dedicated Channel Test

2.2.2.2.1 Definition

This test shall only be applied to mobile stations that support position location session origination on a dedicated channel. The purpose of this test is to determine the mobile station's capability to operate in a mode where the position location session is originated by the mobile station

2.2.2.2.2 Method of Measurement

1. Connect a base station simulator and a GPS simulator to the mobile station as shown in Figure 6.12.1-1.
2. Configure the mobile station to operate in a band class it supports.
3. Configure the base station according to the standard test parameters listed in 6.12.2.
4. Configure the GPS simulator according to the standard test parameters listed in Annex B.

5. Set the GPS simulator output levels according to Table 2.2.1.2-1. Satellites not listed in Table 2.2.1.2-1 shall not be simulated.
6. Power up the mobile station.
7. Reset previous measurements, computed positions, values calculated during previous fixes and GPS system time.
8. Set up a mobile station originated voice call.
9. Initiate a Test Mode 2 session.
10. Record the values returned by the mobile station or the computed location stored in the mobile station
11. Power down the mobile station

2.2.2.2.3 Minimum Specification

The mobile station shall complete the position location session by returning one or more *Provide Pseudorange Measurement* messages if it is not capable of location computation or by computing its own location otherwise.

Note, if the mobile station is capable of location computation, it may return neither pseudorange measurement values nor the calculated position during this test. In this case the calculated position shall be retrieved from the mobile station by other means (for example, through the data port).

The parameters returned or computed by the mobile station shall satisfy the requirements listed in Table 2.2.2.1.3-1 (see also 1.6).

Note, time limit T_2 applies to the measurement time period that starts at invoking the position location session at the mobile station.

This page intentionally left blank.

3 GNSS MINIMUM SPECIFICATIONS

The tests described in this section shall be performed for GNSS capable mobile stations. GNSS capable mobile stations may return *Provide GNSS Pseudorange Measurement* messages or *Provide Advanced Location Response* messages. For a mobile station that is capable of returning *Provide GNSS Pseudorange Mesaurement* messages, the parameter fields of that message will be tested. For a mobile station that is capable of returning *Provide Advanced Location Response* messages, the parameter fields of that message will be tested. The following comments apply to all GNSS test cases:

- The serving base station pilot PN offset corresponds directly to PILOT_PN in the *Sync Channel Message* and to "Pilot PN sequence offset" and "Reference PN" in the PDE simulator GNSS assistance messages.
- The serving base station power is set to $\hat{I}_{or}$= -70 dBm.
- The simulated locations (not the actual physical locations) of the mobile station and the serving base station are as follows: In the stationary and protocol tests, the serving base station is due north from the mobile station at a distance of $5/\sqrt{3}$ km. In the moving scenario test, the mobile station's trajectory is circular in the horizontal plane, with a radius of 1 km centered at the serving base station location. See Annex C for detailed location data.
- The limit values for each measurement parameter represent an interpretation of the returned values with the units stated and are not the actual returned binary values.

3.1 GNSS Performance Specifications

The performance specifications described in this section set a minimum acceptable level of accuracy for the GNSS based measurements returned by the mobile station under various test conditions.

All signals per the supported GNSS are simulated with relative signal power according to Table 3-1. The reference power levels are defined in each test.

Table 3-1 Relative Signal Power Levels for Various Signal Types

	Galileo		**GPS/Modernized GPS**		**GLONASS**		**QZSS**		**SBAS**	
Signal power level relative to reference power levels (dB)	E1	0	L1 C/A	0	G1	0	L1 C/A	0	L1	0
	E6	+2	L1C	+1.5	G2	-6	L1C	+1.5		
	E5	+2	L2C	-1.5			L2C	-1.5		
			L5	+3.6			L5	+3.6		

3.1.1 Stationary Location Tests

In stationary location tests, the signal environment is set such that a stationary mobile station location is simulated.

3.1.1.1 GNSS Accuracy Test

3.1.1.1.1 Definition

The purpose of this test is to determine the mobile station's capability to obtain precise GNSS measurements under favorable signal conditions and good satellite geometry. The GNSS simulator shall provide high SNR signals representing six or seven satellites with HDOP between 1.4 and 2.1. Note that the GNSS assistance provided by the serving base station is not limited to six or seven satellites during this test. A sequence of independent measurements is carried out. In each measurement, the mobile station shall return a *Provide Advanced Location Response* message if the mobile station is capable of location computation; or it shall return one or more *Provide GNSS Pseudorange Measurement* messages if it is not capable of location computation. The test may be stopped when the required confidence levels are met for all tested parameters.

3.1.1.1.2 Method of Measurement

1. Connect a base station simulator and a GNSS simulator to the mobile station as shown in Figure 6.12.1-4.
2. For each band class that the mobile station supports, configure the mobile station to operate in that band class and perform steps 3 through 13.
3. Configure the base station according to the standard test parameters listed in 6.12.2.
4. Configure the GNSS simulator according to the standard test parameters listed in Annex C.
5. Set the GNSS simulator output levels according to Table 3.1.1.1.2-1 and Table 3.1.1.1.2-2. Satellites not listed in Table 3.1.1.1.2-1 and Table 3.1.1.1.2-2 shall not be simulated.

Table 3.1.1.1.2-1 Satellite Signal Levels for the GNSS Accuracy Test

System	Parameters	Unit	Value
	Number of generated satellites per system	-	See Table 3.1.1.1.2-2
	Total number of generated satellites	-	6 or 7(2)
	HDOP Range	-	1.4 to 2.1
	Propagation conditions	-	AWGN
GPS(1)	Reference signal power level for all satellites	dBm	-128.5
Galileo	Reference signal power level for all satellites	dBm	-127
GLONASS	Reference signal power level for all satellites	dBm	-131
QZSS(3)	Reference signal power level for all satellites	dBm	-128.5
SBAS(4)	Reference signal power level for all satellites	dBm	-131
NOTE 1: ”GPS” means GPS L1 C/A, Modernized GPS, or both, dependent on the MS capabilities NOTE 2: 7 satellites applies only for SBAS case NOTE 3: If QZSS is supported, one of the GPS satellites is replaced by a QZSS satellite with respective signal support NOTE 4: If SBAS is supported, the SBAS satellite with the highest elevation is added to the scenario			

Table 3.1.1.1.2-2 Satellite Allocation for the GNSS Accuracy Test

	Satellite allocation for each constellation			
	GNSS 1(1)	**GNSS 2(1)**	**GNSS 3(1)**	**SBAS**
Single constellation	6	-	-	1
Dual constellation	3	3	-	1
Triple constellation	2	2	2	1
NOTE1: GNSS refers to global systems, i.e., GPS, Galileo, GLONASS				

6. Measure and record the time offset between the base station and the GNSS simulator time base (see 6.8).
7. Repeat Steps 8 through 13.
8. Power up the mobile station.

9. Reset previous measurements, computed positions, values calculated during previous fixes and GNSS system time.
10. Initiate a mobile originated or terminated voice call for the measurement domain test and a mobile originated voice call for the position domain test.
11. Initiate a Test Mode 2 or 4 session for the measurement domain test and a Test Mode 2 session for the position domain test.
12. Record the values returned by the mobile station.
13. Power down the mobile station.

3.1.1.1.3 Minimum Specification

The parameters returned by the mobile station shall satisfy the requirements listed in Table 3.1.1.1.3-1; the confidence level for all σ_1, σ_2 type tests shall be 90% (see also 1.6).

Table 3.1.1.1.3-1 Minimum Specifications for the GNSS Accuracy Test

Mobile Station Response	Parameter Field	Limit Parameter	Limit Value
Provide GNSS Pseudorange Measurement	Code Phase Origin Code Phase	N	4
		T_2	16 s
		$CODE_{1R}$	50 ns
		$CODE_{2R}$	150 ns
		$CODE_{1A}$	220 ns
		$CODE_{2A}$	320 ns
	Satellite Pseudodoppler	DPR_1	30 Hz
		DPR_2	50 Hz
	Satellite C/No	CNO_1	4 dB-Hz
		CNO_2	6 dB-Hz
	Pseudorange RMS Error	R_1	0
		R_2	3
	Satellite Pseudodoppler RMS Error	R_1	0
		R_2	3
Provide Advanced Location Response	Latitude Longitude	N	1
		T_2	18s
		$LATLONG_1$	25 m
		$LATLONG_2$	75 m

3.1.1.2 GNSS Dynamic Range Test

3.1.1.2.1 Definition

The purpose of this test is to determine the mobile station's capability to obtain precise GNSS measurements under variable (strong to weak) signal conditions while stationary. The GNSS simulator shall provide signals representing six satellites with HDOP between 1.4 and 2.1. Note that the GNSS assistance provided by the serving base station is not limited to six satellites during this test. A sequence of independent measurements is carried out. In each measurement, the mobile station shall return a *Provide Advanced Location Response* message if the mobile station is capable of location computation; or it shall return one or more *Provide GNSS Pseudorange Measurement* messages if it is not capable of location computation. The test may be stopped when the required confidence levels are met for all tested parameters.

3.1.1.2.2 Method of Measurement

1. Connect a base station simulator and a GNSS simulator to the mobile station as shown in Figure 6.12.1-4.
2. For each band class that the mobile station supports, configure the mobile station to operate in that band class and perform steps 3 through 13.
3. Configure the base station according to the standard test parameters listed in 6.12.2.
4. Configure the GNSS simulator according to the standard test parameters listed in Annex C.
5. Set the GNSS simulator output levels according to Table 3.1.1.2.2-1 and Table 3.1.1.2.2-2. Satellites not listed in Table 3.1.1.2.2-1 and Table 3.1.1.2.2-2 shall not be simulated.

Table 3.1.1.2.2-1 Satellite Signal Levels for the GNSS Dynamic Range Test

System	Parameters	Unit	Value
	Number of generated satellites per system	-	See Table 3.1.1.2.2-2
	Total number of generated satellites	-	6
	HDOP Range	-	1.4 to 2.1
	Propagation conditions	-	AWGN
GPS(1)	Reference high signal power level	dBm	-129
	Reference low signal power level	dBm	-149
Galileo	Reference high signal power level	dBm	-127.5
	Reference low signal power level	dBm	-149
GLONASS	Reference high signal power level	dBm	-131.5
	Reference low signal power level	dBm	-149
NOTE 1: "GPS" means GPS L1 C/A, Modernized GPS, or both, dependent on the MS capabilities			

Table 3.1.1.2.2-2 Satellite Allocation for the GNSS Dynamic Range Test

		Satellite allocation for each constellation		
		GNSS 1(1)	**GNSS 2(1)**	**GNSS 3(1)**
Single constellation	High signal level	2	-	-
	Low signal level	4	-	-
Dual constellation	High signal level	1	1	-
	Low signal level	2	2	-
Triple constellation	High signal level	1	1	1
	Low signal level	1	1	1
NOTE1: GNSS refers to global systems, i.e., GPS, Galileo, GLONASS				

6. Measure and record the time offset between the base station and the GNSS simulator time base (see 6.8).
7. Repeat Steps 8 through 13.
8. Power up the mobile station.
9. Reset previous measurements, computed positions, values calculated during previous fixes and GNSS system time.

10. Initiate a mobile originated or terminated voice call for the measurement domain test and a mobile originated voice call for the position domain test.
11. Initiate a Test Mode 2 or 4 session for the measurement domain test and a Test Mode 2 session for the position domain test.
12. Record the values returned by the mobile station.
13. Power down the mobile station.

3.1.1.2.3 Minimum Specification

The parameters returned by the mobile station shall satisfy the requirements listed in Table 3.1.1.2.3-1; the confidence level for all σ_1, σ_2 type tests in position domain and σ_1, $\sigma_{80\%}$ type tests in measurement domain shall be 90% (see also 1.6).

Table 3.1.1.2.3-1 Minimum Specifications for the GNSS Dynamic Range Test

Mobile Station Response	Parameter Field	Limit Parameter	Limit Value
Provide GNSS Pseudorange Measurement	Code Phase Origin Code Phase	N	6
		T_2	32 s
		$CODE_{1R}$	100 ns
		$CODE_{3R}$	300 ns
		$CODE_{1A}$	300 ns
		$CODE_{3A}$	600 ns
	Satellite Pseudodoppler	DPR_1	40 Hz
		DPR_3	80 Hz
	Satellite C/No	CNO_1	4 dB-Hz
		CNO_3	6 dB-Hz
	Pseudorange RMS Error	R_1	0
		R_2	3
	Satellite Pseudodoppler RMS Error	R_1	0
		R_2	3
Provide Advanced Location Response	Latitude Longitude	N	1
		T_2	18 s
		$LATLONG_1$	50 m
		$LATLONG_2$	150 m

3.1.1.3 GNSS Sensitivity Test

3.1.1.3.1 Definition

The purpose of this test is to determine the mobile station's capability to obtain GNSS measurements under weak satellite signal conditions. The GNSS simulator shall provide low SNR signals representing six satellites with HDOP between 1.4 and 2.1. Note that the GNSS assistance provided by the serving base station is not limited to six satellites during this test. A sequence of independent measurements is carried out. In each measurement, the mobile station shall return a *Provide Advanced Location Response* message if the mobile station is capable of location computation; or it shall return one or more *Provide GNSS Pseudorange Measurement* messages if it is not capable of location computation. The test may be stopped when the required confidence levels are met for all tested parameters.

3.1.1.3.2 Method of Measurement

1. Connect a base station simulator and a GNSS simulator to the mobile station as shown in Figure 6.12.1-4.
2. For each band class that the mobile station supports, configure the mobile station to operate in that band class and perform steps 3 through 13.
3. Configure the base station according to the standard test parameters listed in 6.12.2.
4. Configure the GNSS simulator according to the standard test parameters listed in Annex C.
5. Set the GNSS simulator output levels according to Table 3.1.1.3.2-1 and Table 3.1.1.3.2-2. Satellites not listed in Table 3.1.1.3.2-1 and Table 3.1.1.3.2-2 shall not be simulated.

Table 3.1.1.3.2-1 Satellite Signal Levels for the GNSS Sensitivity Test

System	Parameters	Unit	Value
	Number of generated satellites per system	-	See Table 3.1.1.3.2-2
	Total number of generated satellites	-	6
	HDOP Range	-	1.4 to 2.1
	Propagation conditions	-	AWGN
GPS(1)	Reference signal power level for all satellites	dBm	-149
Galileo	Reference signal power level for all satellites	dBm	-149
GLONASS	Reference signal power level for all satellites	dBm	-149
NOTE 1: "GPS" means GPS L1 C/A, Modernized GPS, or both, dependent on the MS capabilities			

Table 3.1.1.3.2-2 Satellite Allocation for the GNSS Sensitivity Test

	Satellite allocation for each constellation		
	GNSS 1(1)	**GNSS 2(1)**	**GNSS 3(1)**
Single constellation	6	-	-
Dual constellation	3	3	-
Triple constellation	2	2	2
NOTE1: GNSS refers to global systems, i.e., GPS, Galileo, GLONASS			

6. Measure and record the time offset between the base station and the GNSS simulator time base (see 6.8).
7. Repeat Steps 8 through 13.
8. Power up the mobile station.
9. Reset previous measurements, computed positions, values calculated during previous fixes and GNSS system time.
10. Initiate a mobile originated or terminated voice call for the measurement domain test and a mobile originated voice call for the position domain test.
11. Initiate a Test Mode 2 or 4 session for the measurement domain test and a Test Mode 2 session for the position domain test.
12. Record the values returned by the mobile station.
13. Power down the mobile station.

3.1.1.3.3 Minimum Specification

The parameters returned by the mobile station shall satisfy the requirements listed in Table 3.1.1.3.3-1; the confidence level for all σ_1, σ_2 type tests shall be 90% (see also 1.6).

Table 3.1.1.3.3-1 Minimum Specifications for the GNSS Sensitivity Test

Mobile Station Response	Parameter Field	Limit Parameter	Limit Value
Provide GNSS Pseudorange Measurement	Code Phase Origin Code Phase	N	4
		T_2	16 s
		$CODE_{1R}$	110 ns
		$CODE_{2R}$	330 ns
		$CODE_{1A}$	310 ns
		$CODE_{2A}$	630 ns
	Satellite Pseudodoppler	DPR_1	40 Hz
		DPR_2	80 Hz
	Satellite C/No	CNO_1	4 dB-Hz
		CNO_2	6 dB-Hz
	Pseudorange RMS Error	R_1	0
		R_2	3
	Satellite Pseudodoppler RMS Error	R_1	0
		R_2	3
Provide Advanced Location Response	Latitude Longitude	N	1
		T_2	18 s
		$LATLONG_1$	60 m
		$LATLONG_2$	180 m

3.1.1.4 GNSS Multipath Accuracy Test

3.1.1.4.1 Definition

The purpose of this test is to determine the mobile station's capability to obtain precise GNSS measurements under a simple, two-ray GNSS multipath environment and good satellite geometry. The GNSS simulator shall provide signals representing a total of six satellites with HDOP between 1.4 and 2.1. Two separate GNSS signals shall be produced for three or four of the six GNSS satellites being simulated and presented to the mobile

station under test, one representing an attenuated, direct path and one representing a higher amplitude, delayed multipath signal. Note that the GNSS assistance provided by the serving base station is not limited to six satellites during this test. A sequence of independent measurements is carried out. In each measurement, the mobile station shall return a *Provide Advanced Location Response* message if the mobile station is capable of location computation; or it shall return one or more *Provide GNSS Pseudorange Measurement* messages if it is not capable of location computation. The test may be stopped when the required confidence levels are met for all tested parameters.

3.1.1.4.2 Method of Measurement

1. Connect a base station simulator and a GNSS simulator to the mobile station as shown in Figure 6.12.1-4.
2. For each band class that the mobile station supports, configure the mobile station to operate in that band class and perform steps 3 through 13.
3. Configure the base station according to the standard test parameters listed in 6.12.2.
4. Configure the GNSS simulator according to the standard test parameters listed in Annex C. The Doppler shift of the multipath signal relative to the direct signal shall be in the range of 0.1 Hz to 0.5 Hz.
5. Set the GNSS simulator output levels according to Table 2.1.1.4.2-1 and Table 3.1.1.4.2-2. Satellites not listed in Table 2.1.1.4.2-1 and Table 3.1.1.4.2-2 shall not be simulated.

Table 3.1.1.4.2-1 Satellite Signal Levels for the GNSS Multipath Accuracy Test

System	Parameters	Unit	Value
	Number of generated satellites per system	-	See Table 3.1.1.4.2-2
	Total number of generated satellites	-	6
	HDOP Range	-	1.4 to 2.1
	Propagation conditions	-	AWGN
GPS(1)	Reference LOS signal power level	dBm	-147
	Reference Multipath(2) signal power level	dBm	-144
Galileo	Reference LOS signal power level	dBm	-147
	Reference Multipath(2) signal power level	dBm	-144
GLONASS	Reference LOS signal power level	dBm	-147
	Reference Multipath(2) signal power level	dBm	-144
NOTE 1: "GPS" means GPS L1 C/A, Modernized GPS, or both, dependent on the MS capabilities NOTE 2: The multipath signal is delayed by 2 GNSS chips initially from the LOS signal for each individual GNSS signal, i.e., GPS L1 C/A, Galileo E1 or GLONASS G1, etc.			

Table 3.1.1.4.2-2 Satellite Allocation for the GNSS Multipath Accuracy Test

		Satellite allocation for each constellation		
		GNSS 1(1)	**GNSS 2(1)**	**GNSS 3(1)**
Single constellation	LOS-only SVs	2	-	-
	SVs with LOS & Multipath	4	-	-
Dual constellation	LOS-only SVs	1	1	-
	SVs with LOS & Multipath	2	2	-
Triple constellation	LOS-only SVs	1	1	1
	SVs with LOS & Multipath	1	1	1
NOTE1: GNSS refers to global systems, i.e., GPS, Galileo, GLONASS				

6. Measure and record the time offset between the base station and the GNSS simulator time base (see 6.8).

7. Repeat Steps 8 through 13.

8. Power up the mobile station.
9. Reset previous measurements, computed positions, values calculated during previous fixes and GNSS system time.
10. Initiate a mobile originated or terminated voice call for the measurement domain test and a mobile originated voice call for the position domain test.
11. Initiate a Test Mode 2 or 4 session for the measurement domain test and a Test Mode 2 session for the position domain test.
12. Record the values returned by the mobile station.
13. Power down the mobile station.

3.1.1.4.3 Minimum Specification

The parameters returned by the mobile station shall satisfy the requirements listed in Table 3.1.1.4.3-1; the confidence level for all σ_1, σ_2 type tests shall be 90% (see also 1.6).

Table 3.1.1.4.3-1 Minimum Specifications for the GNSS Multipath Accuracy Test

Mobile Station Response	Parameter Field	Limit Parameter	Limit Value
Provide GNSS Pseudorange Measurement	Code Phase Origin	N	4
	Code Phase	T_2	16 s
		$CODE_{1R}$	110 ns
		$CODE_{2R}$	330 ns
		$CODE_{1A}$	310 ns
		$CODE_{2A}$	630 ns
	Satellite Pseudodoppler	DPR_1	35 Hz
		DPR_2	70 Hz
	Satellite C/No	CNO_1	4 dB-Hz
		CNO_2	6 dB-Hz
	Pseudorange RMS Error	R_1	0
		R_2	3
	Satellite Pseudodoppler RMS Error	R_1	0
		R_2	3
Provide Advanced Location Response	Latitude	N	1
	Longitude	T_2	18 s
		$LATLONG_1$	60 m
		$LATLONG_2$	180 m

3.1.2 Moving Scenario Test

3.1.2.1 Moving Scenario GNSS Accuracy Test

3.1.2.1.1 Definition

The purpose of this test is to determine the mobile station's capability to obtain precise GNSS measurements under favorable signal conditions, when the mobile station is in motion. The mobile station's trajectory is circular in the horizontal plane, with a radius of 1 km. The mobile station's speed is constant at 100 km/h. The GNSS simulator shall provide high SNR signals representing six satellites with HDOP between 1.4 and 2.1. Note that the GNSS assistance provided by the serving base station is not limited to six satellites during this test. A sequence of independent measurements is carried out. In each measurement, the mobile station shall return a *Provide Advanced Location Response* message if the mobile station is capable of location computation; or it shall return one or

more *Provide GNSS Pseudorange Measurement* messages if it is not capable of location computation. The test may be stopped when the required confidence levels are met for all tested parameters.

3.1.2.1.2 Method of Measurement

1. Connect a base station simulator and a GNSS simulator to the mobile station as shown in Figure 6.12.1-4.
2. For each band class that the mobile station supports, configure the mobile station to operate in that band class and perform steps 3 through 13.
3. Configure the base station according to the standard test parameters listed in 6.12.2.
4. Configure the GNSS simulator according to the standard test parameters listed in Annex C.
5. Set the GNSS simulator output levels according to Table 3.1.2.1.2-1 and Table 3.1.2.1.2-2. Satellites not listed in Table 3.1.2.1.2-1 and Table 3.1.2.1.2-2 shall not be simulated.

Table 3.1.2.1.2-1 Satellite Signal Levels for the Moving Scenario GNSS Accuracy Test

System	Parameters	Unit	Value
	Number of generated satellites per system	-	See Table 3.1.2.1.2-2
	Total number of generated satellites	-	6
	HDOP Range	-	1.4 to 2.1
	Propagation conditions	-	AWGN
GPS(1)	Reference signal power level for all satellites	dBm	-128.5
Galileo	Reference signal power level for all satellites	dBm	-127
GLONASS	Reference signal power level for all satellites	dBm	-131
NOTE 1: "GPS" means GPS L1 C/A, Modernized GPS, or both, dependent on the MS capabilities			

Table 3.1.2.1.2-2 Satellite Allocation for the Moving Scenario GNSS Accuracy Test

	Satellite allocation for each constellation		
	GNSS 1(1)	**GNSS 2(1)**	**GNSS 3(1)**
Single constellation	6	-	-
Dual constellation	3	3	-
Triple constellation	2	2	2
NOTE1: GNSS refers to global systems, i.e., GPS, Galileo, GLONASS			

6. Measure and record the time offset between the base station and the GNSS simulator time base (see 6.8).
7. Repeat Steps 8 through 13.
8. Power up the mobile station.
9. Reset previous measurements, computed positions, values calculated during previous fixes and GNSS system time.
10. Initiate a mobile originated or terminated voice call for the measurement domain test and a mobile originated voice call for the position domain test.
11. Initiate a Test Mode 2 or 4 session for the measurement domain test and a Test Mode 2 session for the position domain test.
12. Record the values returned by the mobile station.
13. Power down the mobile station.

3.1.2.1.3 Minimum Specification

The parameters returned by the mobile station shall satisfy the requirements listed in Table 3.1.2.1.3-1; the confidence level for all σ_1, σ_2 type tests shall be 90% (see also 1.6).

Table 3.1.2.1.3-1 Minimum Specifications for the Moving Scenario GNSS Accuracy Test

Mobile Station Response	Parameter Field	Limit Parameter	Limit Value
Provide GNSS Pseudorange Measurement	Code Phase Origin Code Phase	N	4
		T_2	16 s
		$CODE_{1R}$	70 ns
		$CODE_{2R}$	220 ns
		$CODE_{1A}$	400 ns
		$CODE_{2A}$	700 ns
	Satellite Pseudodoppler	DPR_1	35 Hz
		DPR_2	70 Hz
	Satellite C/No	CNO_1	4 dB-Hz
		CNO_2	6 dB-Hz
	Pseudorange RMS Error	R_1	0
		R_2	3
	Satellite Pseudodoppler RMS Error	R_1	0
		R_2	3
Provide Advanced Location Response	Latitude Longitude	N	1
		T_2	18 s
		$LATLONG_1$	35 m
		$LATLONG_2$	105 m

4 AFLT MINIMUM SPECIFICATION

The tests described in this section shall be performed for AFLT capable mobile stations.

4.1 General Comments on AFLT Tests

The following comments apply to all AFLT test cases:

- AFLT tests only reflect 2D location processing.
- Only cases where three base stations (base station 1, 2 and 3) can be observed by the mobile station are examined.
- Although the *Provide Pilot Phase Measurement* message specified in [1] enables the mobile station to simultaneously report pilot phase measurements for more than one CDMA frequency or Band Class, the tests included in this Specification do not cover that capability.
- AFLT tests are described as using base stations or base station simulators, but it is understood that equivalent pilot generators for the non-serving base stations may be used.
- No handoff scenario tests are included, the serving base station is always base station 1.
- For all AFLT tests, base station 1 pilot PN offset is P_0, base station 2 pilot PN offset is P_1 and base station 3 PN offset is P_2, where P_0, P_1 and P_2 are arbitrary values satisfying the requirements listed in 6.12.2. Furthermore, P_0 corresponds to PILOT_PN in the *Sync Channel Message*, while P_1 and P_2 correspond to the appropriate values in both the *General Neighbor List Message* (see Table 6.12.2-4) and the PDE simulator *Provide Base Station Almanac* message.
- For all AFLT tests, the simulated locations (not the actual physical locations) of the mobile station and the base stations are as follows: The three base stations form an equilateral triangle with the mobile station being at the geometric center of the triangle. Each base station is at a distance of 5 km from every other base station; thus, the mobile station is at a distance of $5/\sqrt{3}$ km from each base station. Base station 1 is due north from the mobile station, and base station 2 is southeast from the mobile station. See Annex B for detailed location data. Note, because of the above configuration, the true time offset between the base stations' signals observed at the mobile station's location should be zero.
- If the mobile station is capable of location computation based on AFLT measurements (Bit 3 or Bit 8 or both is set to '1' in the *Provide MS Information* message sent by the mobile station), and the returned location is evaluated, then the alternative base station synchronization method described in 6.4.2 shall not be used. Instead, the stricter requirement of maintaining less than 30 ns timing offset between the base stations shall be met (see 6.4.2).
- The limit values for each measurement parameter represent an interpretation of the returned values with the units stated and are not the actual returned binary values.

4.2 AFLT Performance Specifications

The measurement performance specifications described in this section set a minimum acceptable level of accuracy for the AFLT measurements returned by the mobile station under various test conditions.

4.2.1 AFLT Accuracy Test

4.2.1.1 Definition

The purpose of this test is to determine the mobile station's capability to obtain precise pilot phase measurements under favorable signal level and HDOP conditions. The base station simulators shall provide high SNR signals representing three base stations. A sequence of independent measurements is carried out. In each measurement, the mobile station shall return a *Provide Location Response* message if the mobile station is capable of location computation; or it shall return one or more *Provide Pilot Phase Measurement* messages if it is not capable of location computation. The test may be stopped when the required confidence levels are met for all tested parameters.

4.2.1.2 Method of Measurement

1. Connect three base station simulators and an AWGN generator to the mobile station as shown in Figure 6.12.1-2.
2. For each band class that the mobile station supports, configure the mobile station to operate in that band class and perform steps 3 through 12.
3. Configure the serving base station according to the standard test parameters listed in 6.12.2.
4. Set the base station simulator and AWGN generator output levels according to Table 4.2.1.2-1.

Table 4.2.1.2-1 Signal Levels for the AFLT Accuracy Test

Parameter	Unit	Base Station 1	Base Station 2	Base Station 3
$\hat{I}_{or}/I_{oc}$	dB	3	0	0
I_{oc}	dBm/1.23 MHz	-58		
$\frac{\text{Pilot } E_c}{I_0}$	dB	-11	-14	-14

Note: The Pilot E_C/I_O value is calculated from the parameters in the table. It is not a directly settable parameter.

5. Measure and record the time offset between the base stations (see 6.4.2).
6. Repeat Steps 7 through 12.

7. Power up the mobile station.
8. Reset the position location related parameters stored by the mobile station.
9. Initiate a mobile terminated voice call.
10. Initiate a Test Mode 4 session.
11. Record the values returned by the mobile station.
12. Power down the mobile station.

4.2.1.3 Minimum Specification

The parameters returned by the mobile station shall satisfy the requirements listed in Table 4.2.1.3-1; the confidence level for all σ_1, σ_2 type tests shall be 90% (see also 1.6).

Table 4.2.1.3-1 Minimum Specifications for the AFLT Accuracy Test

Mobile Station Response	Parameter Field	Limit Parameter	Limit Value
Provide MS Information	N/A	T_1	750 ms
Provide Pilot Phase Measurement	PILOT_PN_PHASE	N	3
		T_2	8 s
		$PNPHASE_1$	3/16 PN chips
		$PNPHASE_2$	1/2 PN chips
	TOTAL_RX_PWR	$RXPWR_1$	10 dBm/1.23 MHz
		$RXPWR_2$	12 dBm/1.23 MHz
	REF_PILOT_STRENGTH	$REFPS_1$	2.5 dB
		$REFPS_2$	3.5 dB
	PILOT_STRENGTH	PS_1	2.5 dB
		PS_2	3.5 dB
	RMS_ERR_PHASE	R_1	0
		R_2	3
Provide Location Response	LAT LONG	N	1
		T_2	8 s
		$LATLONG_1$	45 m
		$LATLONG_2$	135 m

4.2.2 AFLT Sensitivity Test

4.2.2.1 Definition

The purpose of this test is to determine the mobile station's capability to obtain pilot phase measurements under weak signal level conditions. The base station simulators shall provide a high SNR serving sector signal and two low SNR neighbor pilot signals. A sequence of independent measurements is carried out. In each measurement, the mobile station shall return a *Provide Location Response* message if the mobile station is capable of location computation; or it shall return one or more *Provide Pilot Phase Measurement* messages if it is not capable of location computation. The test may be stopped when the required confidence levels are met for all tested parameters.

4.2.2.2 Method of Measurement

1. Connect three base station simulators and an AWGN generator to the mobile station as shown in Figure 6.12.1-2.
2. For each band class that the mobile station supports, configure the mobile station to operate in that band class and perform steps 3 through 12.
3. Configure the base station according to the standard test parameters listed in 6.12.2.
4. Set the base station simulator and AWGN generator output levels according to Table 4.2.2.2-1.

Table 4.2.2.2-1 Signal Levels for the AFLT Sensitivity Test

Parameter	Unit	Base Station 1	Base Station 2	Base Station 3
$\hat{I}_{or}/I_{oc}$	dB	0	-15.9	-15.9
I_{oc}	dBm/1.23 MHz	-55		
$\frac{\text{Pilot } E_c}{I_0}$	dB	-10.1	-26	-26

Note: The Pilot E_c/I_o value is calculated from the parameters in the table. It is not a directly settable parameter.

5. Measure and record the time offset between the base stations (see 6.4.2).
6. Repeat Steps 7 through 12.
7. Power up the mobile station.
8. Reset the position location related parameters stored by the mobile station.
9. Initiate a mobile terminated voice call.
10. Initiate a Test Mode 4 session.

11. Record the values returned by the mobile station.

12. Power down the mobile station.

4.2.2.3 Minimum Specification

The parameters returned by the mobile station shall satisfy the requirements listed in Table 4.2.2.3-1; the confidence level for all σ_1, σ_2 type tests shall be 90% (see also 1.6).

Table 4.2.2.3-1 Minimum Specifications for the AFLT Sensitivity Test

Mobile Station Response	Parameter Field	Limit Parameter	Limit Value
Provide MS Information	N/A	T_1	750 ms
Provide Pilot Phase Measurement	PILOT_PN_PHASE	N	3
		T_2	8 s
		$PNPHASE_1$	5/16 PN chips
		$PNPHASE_2$	9/16 PN chips
	TOTAL_RX_PWR	$RXPWR_1$	10 dBm/1.23 MHz
		$RXPWR_2$	12 dBm/1.23 MHz
	REF_PILOT_STRENGTH	$REFPS_1$	2.5 dB
		$REFPS_2$	3.5 dB
	PILOT_STRENGTH	PS_1	4.5 dB
		PS_2	8 dB
	RMS_ERR_PHASE	R_1	0
		R_2	4
Provide Location Response	LAT LONG	N	1
		T_2	8 s
		$LATLONG_1$	90 m
		$LATLONG_2$	180 m

4.3 AFLT Protocol Tests

The protocol tests presented in this section shall be performed if the tests listed in 2.2 are not performed.

4.3.1 AFLT Position Location Session on the Paging Channel Test

4.3.1.1 Definition

The purpose of this test is to determine the mobile station's capability to operate in a mode where the base station initiates a position location session on the Paging Channel.

4.3.1.2 Method of Measurement

1. Connect three base station simulators to the mobile station as shown in Figure 6.12.1-2.
2. Configure the mobile station to operate in a band class it supports.
3. Configure the base station according to the standard test parameters listed in 6.12.2.
4. Set the base station simulator output levels according to Table 4.3.1.2-1.

Table 4.3.1.2-1 Signal Levels for the AFLT Protocol Tests

Parameter	Unit	Channel 1	Channel 2	Channel 3
$\hat{I}_{or}$	dBm/1.23 MHz	-55	-58	-58
$\frac{\text{Pilot } E_c}{I_0}$	dB	-10	-13	-13

Note: The Pilot E_c/I_o value is calculated from the parameters in the table. It is not a directly settable parameter.

5. Power up the mobile station.
6. Reset the position location related parameters stored by the mobile station.
7. Initiate a mobile terminated voice call.
8. Initiate a Test Mode 3 session.
9. Record the values returned by the mobile station.
10. Power down the mobile station.

4.3.1.3 Minimum Specification

The mobile station shall respond to base station requests received on the Paging Channel and it shall complete the position location session by returning a *Provide Location Response* message if the mobile station is capable of location computation; or it shall return one or more *Provide Pilot Phase Measurement* messages if it is not capable of location computation. The parameters returned by the mobile station shall satisfy the requirements listed in Table 4.3.1.3-1 (see also 1.6).

Table 4.3.1.3-1 Minimum Specifications for the AFLT Position Location Session on the Paging Channel Test

Mobile Station Response	Parameter Field	Limit Parameter	Limit Value
Provide Pilot Phase Measurement	PILOT_PN_PHASE	N	2
		T_2	16 s
Provide Location Response	LAT LONG	N	1
		T_2	16 s

4.3.2 Mobile Station Originated AFLT Position Location Session Test

These tests shall only be applied to mobile stations that support mobile station originated position location sessions.

4.3.2.1 Access Channel Test

4.3.2.1.1 Definition

This test shall be only applied to mobile stations that support position location session origination on the Access Channel. The purpose of this test is to determine the mobile station's capability to operate in a mode where the position location session is originated by the mobile station.

4.3.2.1.2 Method of Measurement

1. Connect three base station simulators to the mobile station as shown in Figure 6.12.1-2.
2. Configure the mobile station to operate in a band class it supports.
3. Configure the serving base station according to the standard test parameters listed in 6.12.2.
4. Set the base station simulator output levels according to Table 4.3.1.2-1.
5. Power up the mobile station.
6. Reset the position location related parameters stored by the mobile station.
7. Initiate a Test Mode 1 session.
8. Record the values returned by the mobile station or the computed location stored in the mobile station.
9. Power down the mobile station.

4.3.2.1.3 Minimum Specification

The mobile station shall complete the position location session by returning one or more *Provide Pilot Phase Measurement* messages if it is not capable of location computation or by computing its own location otherwise.

Note, if the mobile station is capable of location computation, it may return neither pilot phase measurement values nor the calculated position during this test. In this case the calculated position shall be retrieved from the mobile station by other means (for example, through the data port).

The parameters returned or computed by the mobile station shall satisfy the requirements listed in Table 4.3.2.1.3-1 (see also 1.6).

Note, time limit T_2 applies to the measurement time period that starts when the position location session is invoked at the mobile station.

Table 4.3.2.1.3-1 Minimum Specifications for the Mobile Station Originated AFLT Position Location Session Tests

Mobile Station Response	Parameter Field	Limit Parameter	Limit Value
Provide Pilot Phase Measurement	PILOT_PN_PHASE	N	2
		T_2	16 s
Computed Mobile Station Location	N/A	N	1
		T_2	16 s

4.3.2.2 Dedicated Channel Test

4.3.2.2.1 Definition

This test shall only be applied to mobile stations that support position location session origination on a dedicated channel. The purpose of this test is to determine the mobile station's capability to operate in a mode where the position location session is originated by the mobile station.

4.3.2.2.2 Method of Measurement

1. Connect three base station simulators to the mobile station as shown in Figure 6.12.1-2.
2. Configure the mobile station to operate in a band class it supports.
3. Configure the serving base station according to the standard test parameters listed in 6.12.2.
4. Set the base station simulator output levels according to Table 4.3.1.2-1.

5. Power up the mobile station.
6. Reset the position location related parameters stored by the mobile station.
7. Set up a mobile station originated voice call.
8. Initiate a Test Mode 2 session.
9. Record the values returned by the mobile station or the computed location stored in the mobile station.
10. Power down the mobile station.

4.3.2.2.3 Minimum Specification

The mobile station shall complete the position location session by returning one or more *Provide Pilot Phase Measurement* messages if it is not capable of location computation or by computing its own location otherwise.

Note, if the mobile station is capable of location computation, it may return neither pilot phase measurement values nor the calculated position during this test. In this case the calculated position shall be retrieved from the mobile station by other means (for example, through the data port).

The parameters returned or computed by the mobile station shall satisfy the requirements listed in Table 4.3.2.1.3-1 (see also 1.6).

Note, time limit T_2 applies to the measurement time period that starts at invoking the position location session at the mobile station.

This page intentionally left blank.

5 HYBRID MINIMUM SPECIFICATIONS

The tests described in this section shall be performed for hybrid capable mobile stations. Hybrid capable mobile stations shall also meet all requirements listed in 2 and 3.

5.1 General Comments on Hybrid Tests

The following comments apply to all hybrid test cases:

- Hybrid tests are described as using base stations or base station simulators, but it is understood that equivalent pilot generators for the non-serving base stations may be used.
- In the hybrid tests, either three base stations (base station 1, 2 and 3) or two base stations are used. In the case of two base stations being used, the base station configuration is the same as in the three base station case but base station 3 is omitted.
- No handoff scenario tests are included; the serving base station is always base station 1.
- For all hybrid tests, base station 1 pilot PN offset is P_0, base station 2 pilot PN offset is P_1 and base station 3 PN offset is P_2, where P_0, P_1 and P_2 are arbitrary values satisfying the requirements listed in 6.12.2. Furthermore, P_0 corresponds to PILOT_PN in the *Sync Channel Message* and to REF_PN in the PDE simulator GPS assistance messages, while P_1 and P_2 correspond to the appropriate values in both the *General Neighbor List Message* (see Table 6.12.2-4) and the PDE simulator *Provide Base Station Almanac* message.
- For all hybrid tests, the simulated locations (not the actual physical locations) of the mobile station and the base stations are as follows: The three base stations form an equilateral triangle with the mobile station being at the geometric center of the triangle. Each base station is at a distance of 5 km from every other base station; thus, the mobile station is at a distance of $5/\sqrt{3}$ km from each base station. Base station 1 is due north from the mobile station, and base station 2 is southeast from the mobile station. See Annex B for detailed location data. Note, because of the above configuration, the true time offset between the base stations' signals observed at the mobile station's location should be zero.
- The inconsistency between the assumed mobile station to base station distance as specified above and the physical base station to mobile station signal propagation delay is compensated by setting the TIME_CRRECTION_REF and TIME_CORRECTION fields in the *Provide Base Station Almanac* message to the appropriate values.
- In this section where the mobile station is capable of location computation, the alternative base station to base station and base station to GPS simulator synchronization method described in 6.4.2 and 6.6 shall not be used. Instead, the stricter requirement of maintaining less than 30 ns timing offset shall be met (see 6.4.2 and 6.6).

- The limit values for each measurement parameter represent an interpretation of the returned values with the units stated and are not the actual returned binary values.

5.2 Hybrid Performance Specifications

The measurement performance specifications described in this section set a minimum acceptable level of accuracy for the hybrid measurements returned by the mobile station under various test conditions.

5.2.1 One Base Station + Three Satellites Hybrid Test

5.2.1.1 Definition

This test shall only be applied to mobile stations that are capable of location computation. The purpose of this test is to determine the mobile station's capability to compute location based on only three visible satellites. The GPS simulator shall provide high SNR signals representing three satellites with HDOP less than 3.8. Note that the GPS assistance provided by the serving base station is not limited to three satellites during this test. A sequence of independent measurements is carried out. In each measurement, the mobile station shall return a *Provide Location Response* message. The test may be stopped when the required confidence levels are met for all tested parameters.

5.2.1.2 Method of Measurement

1. Connect a base station simulator and a GPS simulator to the mobile station as shown in Figure 6.12.1-3.
2. Configure the mobile station to operate in a band class it supports.
3. Configure the base station according to the standard test parameters listed in 6.12.2.
4. Configure the GPS simulator according to the standard test parameters listed in Annex B.
5. Set the GPS simulator output levels according to Table 5.2.1.2-1. Satellites not listed in Table 5.2.1.2-1 shall not be simulated.

Table 5.2.1.2-1 Satellite Signal Levels for the One Base Station + Three Satellites Hybrid Test

Satellite PRN Number	Signal Level (dBm)	C/N_0 (dB-Hz)
14, 17, 31	-144	30

6. Repeat Steps 7 through 12.
7. Power up the mobile station.

8. Reset previous measurements, computed positions, values calculated during previous fixes and GPS system time.
9. Initiate a mobile terminated voice call.
10. Initiate a Test Mode 4 session.
11. Record the values returned by the mobile station.
12. Power down the mobile station.

5.2.1.3 Minimum Specification

The parameters returned by the mobile station shall satisfy the requirements listed in Table 5.2.1.3-1; the confidence level for the σ_1, σ_2 type tests shall be 90% (see also 1.6).

Table 5.2.1.3-1 Minimum Specifications for the One Base Station + Three Satellites Hybrid Test

Mobile Station Response	Parameter Field	Limit Parameter	Limit Value
Provide MS Information	N/A	T_1	750 ms
Provide Location Response	LAT LONG	N	1
		T_2	16 s
		LATLONG_1	100 m
		LATLONG_2	175 m

5.2.2 Two Base Stations + One Satellite Hybrid Test

5.2.2.1 Definition

This test shall only be applied to mobile stations that are capable of location computation. The purpose of this test is to determine the mobile station's capability to obtain a position solution by using altitude aiding and observing signals from two base stations and one satellite. The base station simulators shall provide high SNR signals representing two base stations. The GPS simulator shall provide high SNR signal representing one satellite, which is located approximately at elevation equal to 45° and azimuth equal to -120°. Note that the GPS assistance provided by the serving base station is not limited to one satellite during this test. A sequence of independent measurements is carried out. In each measurement, the mobile station shall return a *Provide Location Response* message. The test may be stopped when the required confidence levels are met for all tested parameters.

5.2.2.2 Method of Measurement

1. Connect two base station simulators, a GPS simulator and an AWGN generator to the mobile station as shown in Figure 6.12.1-3.
2. Configure the mobile station to operate in a band class it supports.
3. Configure the serving base station according to the standard test parameters listed in 6.12.2.
4. Configure the GPS simulator according to the standard test parameters listed in Annex B.
5. Set the base station simulator and AWGN generator output levels according to Table 5.2.2.2-1.

Table 5.2.2.2-1 Base Station Signal Levels for the Two Base Stations + One Satellite Hybrid Test

Parameter	Unit	Base Station 1	Base Station 2
$\hat{I}_{or}/I_{oc}$	dB	5	2
I_{oc}	dBm/1.23 MHz	-55	
$\frac{\text{Pilot } E_c}{I_0}$	dB	-9.6	-12.6

Note: The Pilot E_c/I_o value is calculated from the parameters in the table. It is not a directly settable parameter.

6. Set the GPS simulator output level according to Table 5.2.2.2-2. Satellites not listed in Table 5.2.2.2-2 shall not be simulated.

Table 5.2.2.2-2 Satellite Signal Level for the Two Base Stations + One Satellite Hybrid Test

Satellite PRN Number	Signal Level (dBm)	C/N_0 (dB-Hz)
3	-144	30

7. Repeat Steps 8 through 13.
8. Power up the mobile station.
9. Reset previous measurements, computed positions, values calculated during previous fixes and GPS system time.

10. Initiate a mobile terminated voice call.
11. Initiate a Test Mode 4 session.
12. Record the values returned by the mobile station.
13. Power down the mobile station.

5.2.2.3 Minimum Specification

The parameters returned by the mobile station shall satisfy the requirements listed in Table 5.2.2.3-1; the confidence level for the σ_1, σ_2 type tests shall be 90% (see also 1.6).

Table 5.2.2.3-1 Minimum Specifications for the Two Base Stations + One Satellite Hybrid Test

Mobile Station Response	Parameter Field	Limit Parameter	Limit Value
Provide MS Information	N/A	T_1	750 ms
Provide Location Response	LAT LONG	N	1
		T_2	16 s
		$LATLONG_1$	100 m
		$LATLONG_2$	175 m

This page intentionally left blank.

6 STANDARD TEST CONDITIONS

6.1 Standard Equipment

6.1.1 Basic Equipment

The equipment shall be assembled, and any necessary adjustments shall be made in accordance with the manufacturer's instructions for the mode of operation required. When alternative modes are available, the equipment shall be assembled and adjusted in accordance with the relevant instructions. A complete series of measurements shall be made for each mode of operation.

6.1.2 Associated Equipment

The mobile station equipment may include associated equipment during tests, provided that the associated equipment is normally used in the operation of the equipment under test. For mobile station equipment, this may include power supplies, handsets, cradles, charging stands, control cables and battery cables.

6.2 Standard Environmental Test Conditions

Measurements under standard atmospheric conditions shall be carried out under any combination of the following conditions:

- Temperature: +15°C to +35°C
- Relative humidity: 10% to 75%
- Air pressure: 86,000 Pa to 106,000 Pa (860 mbar to 1060 mbar)

If desired, the results of the measurements can be corrected by calculation to the standard reference temperature of 25°C and by the standard reference air pressure of 101,300 Pa (1013 mbar).

The values of noise spectral density presented in this Specification are valid for +17°C, 290 K. If testing is done at any other temperature, the value of the noise spectral density, $N_{0,}$ should be scaled according to the following formula: $N_0 = k \times T$ where k is the Boltzman constant, $k = 1.380658 \times 10^{-23}$ J/K, and T is the room temperature expressed in units of Kelvin.

6.3 Standard Conditions for the Primary Power Supply

6.3.1 General Requirements

The standard test voltages shall be those specified by the manufacturer, or an equivalent type that duplicates the voltage, impedance, and ampere-hours (if relevant for the measurement) of the recommended supply.

6.3.2 Standard DC Test Voltage from Accumulator Batteries

The standard (or nominal) DC test voltage specified by the manufacturer shall be equal to the standard test voltage of the type of accumulator to be used, multiplied by the number of

cells, minus an average DC power cable loss value that the manufacturer determines as being typical (or applicable) for a given installation. Since accumulator batteries may, or may not, be under charge, or may be in a state of discharge when the equipment is being operated, the manufacturer shall also test the equipment at anticipated voltage extremes above and below the standard voltage. The test voltages shall not deviate from the stated values by more than ±2% during a series of measurements carried out as part of a single test on the same equipment.

6.3.3 Standard AC Voltage and Frequency

For equipment that operates from the AC mains, the standard AC test voltage shall be equal to the nominal voltage specified by the manufacturer. If the equipment is provided with different input taps, the one designated “nominal” shall be used. The standard test frequency and the test voltage shall not deviate from their nominal values by more than ±2%.

The equipment shall operate without degradation, with input voltage variations of up to ±10%, and shall maintain its specified transmitter frequency stability for input voltage variations of up to ±15%. The frequency range over which the equipment is to operate shall be specified by the manufacturer.

6.4 Standard CDMA Test Equipment

6.4.1 Base Station Simulator Equipment

6.4.1.1 Transmitter Equipment

The base station transmitter shall be capable of generating the following channels at the specified output power, relative to the total power:

- Pilot Channel: -5 dB to -10 dB.
- Sync Channel: -7 dB to -20 dB.
- Paging Channel: -7 dB to -20 dB.
- Traffic Channel: -7 dB to -20 dB or off for full rate power output. Lower rates will reduce the Traffic Channel power so as to maintain a constant energy per bit.
- Power Control Subchannel: This is always transmitted at the same power as the full rate speech bits.
- OCNS: 0 dB to -6 dB or off. The OCNS may, as an option, be composed of Paging, Sync or Traffic Channels, all operating on different Walsh channels than the channel(s) being used for test.

In addition, the base station transmitter shall meet the following requirements:

- Frequency range: base station frequencies as specified in [2]
- Frequency accuracy: ±0.2 ppm
- Frequency resolution: 10 Hz

- Code phase offset resolution: 100 ns
- Code phase offset accuracy (referenced to the even second output): ±20 ns
- Output range: -40 dBm/1.23 MHz to –110 dBm/1.23 MHz
- Amplitude resolution: 1 dB for all channels
- Output accuracy (relative levels between any two channels): ±1 dB
- Absolute output accuracy: ±2.0 dB
- Minimum waveform quality factor (ρ): greater than 0.966 (excess power is less than 0.15 dB)
- Source VSWR: 2.0:1

Forward Link Power Control:

- When Forward Link Power Control is used, the latency shall be less than 2 power control groups between the end of the power control group with an active power control bit and the corresponding change in power in the base station simulator.
- When Forward Link Power Control is used, the OCNS shall be adjusted to maintain constant base station power. The OCNS adjustments should be made in the same power control group as the response to Power Control Bits and shall occur no more than one power control group later than the response to Power Control Bits.

6.4.1.2 Receiver Equipment

Input Range -50 dBm to +40 dBm. External attenuators or amplifiers or both may be used to meet these power requirements, and may be considered as part of the equipment.

6.4.1.3 Protocol Support

The base station shall be capable of supplying the protocols required by this document.

6.4.1.4 Timing Signals

The base station shall provide the following system timing signals, referenced to the base station antenna port for use as triggers by other measurement equipment:

- 10 MHz frequency reference
- Even second time mark

The base station shall provide signals synchronized to the following event:

- Start of reference clock at preset system time
- Start of power control bit sequence

6.4.1.5 Base Station *Data Burst Message* Transport Capability

The serving base station shall be capable of transporting *Data Burst Messages* in both directions between an auxiliary test equipment connected to it (for example, the PDE simulator described in 6.10) and the mobile station.

The serving base station shall meet the following requirements:

- The serving base station shall provide a transparent connection between the auxiliary test equipment and the mobile station.
- The serving base station shall be capable of sending *Data Burst Messages* on both the paging channel and the forward link traffic channel and receiving *Data Burst Messages* on both the access channel and the reverse link traffic channel.
- The latency between the end of the reception of a *Data Burst Message* and the transmission of the end of the same *Data Burst Message* by the serving base station shall be less than 1 s.

6.4.2 Synchronization of Base Stations

If more than one base station is used in a test and the base stations don't share an internal timing source, then synchronization of the base stations must be achieved by external means.

The synchronization may be achieved by using two separate connections:

1. For frequency synchronization, the serving base station's 10 MHz reference signal should be used.
2. For system time synchronization, the serving base station's even second timing signal should be used.

The synchronization between the base stations shall meet the following minimum requirements:

- Frequency offset between the base station carriers shall be less than ±0.02 ppm.
- Phase offset between the base station carriers shall be constant within ±0.2 radians throughout the test.
- The timing offset between the base stations (i.e. system time modified by the code phase offset adjustments), referenced to the mobile station's antenna input, shall be less than ±30 ns.

If the requirement regarding the timing offset between the base stations is not met, the use the following method is permissible, unless specified otherwise in a test:

1. Connect a clock/counter to the two base stations' even second pulse output, so that the clock measures the time difference between the active edges of the even second pulses outputted by the two base stations. The clock/counter may use an internal time reference or, optionally, derive its internal time reference from one of the base stations' 10 MHz signal.
2. At the beginning of the measurement, record the measured time difference.
3. Before evaluation, correct the pilot phase measurements with the measured offset.

When using the method described above, the achieved synchronization shall meet the following minimum requirements:

- The timing offset between the base stations' even second pulse output shall be less than ±1 μs.
- The timing offset between the base stations' even second pulse output shall be measured with accuracy better than ±10 ns.

6.4.3 CDMA Pilot Generator Equipment

When a particular test requires the use of more than one base station, the non-serving base stations may be simulated by using CDMA pilot generators instead of base station simulators. In this case, if the AWGN generator is also connected (i.e. for all tests other than protocol tests), then the AWGN generator's output signal level is adjusted so that the specified Pilot E_C/I_O values are maintained for all pilots.

6.4.3.1 Transmit Equipment

The requirements for the CDMA pilot generator transmit equipment shall be the same as the requirements relevant to the pilot signal in 6.4.1.1.

6.4.3.2 Timing Signals

The CDMA pilot generator shall accept the following system timing signals, referenced to the CDMA pilot generator antenna port:

- 10 MHz frequency reference
- Even-second time mark

The CDMA pilot generator shall provide the following timing signal, referenced to the CDMA station antenna port for use as triggers by other measurement equipment:

- Even second time mark

6.4.3.3 Synchronization of a CDMA Pilot Generator

The requirements for the CDMA pilot generator transmit equipment shall be the same as the requirements relevant to the base station simulator in 6.4.2.

6.5 GPS Simulator Equipment

The GPS simulator shall be capable of all of the following:

- Generate eight independent C/A signals on the L1 frequency.
- Set accurate satellite positions and timing, based on Ephemeris data input, where all Ephemeris parameter fields are populated.
- Set the signal phase dynamically, based on the satellite and user positions, with added offset derived from ionospheric, tropospheric and group delay models.
- Simultaneously generate signals representing specified code phase and power level offsets for a given satellite.
- Set the user position to be stationary or in motion along a circular trajectory.

- Modulate the satellite signal with navigation bits with a specified bit stream in a manner that is consistent with the simulated GPS system time.
- Start the simulation at a preset GPS system time, triggered by an external signal.

The GPS simulator shall meet the following minimum requirements:

- Frequency (L1): 1575.42 MHz
- Frequency accuracy: ±0.2 ppm
- Code phase accuracy (referenced to the 1 PPS output): ±20 ns
- Doppler resolution: 0.5 Hz
- Doppler accuracy: ±5 Hz
- Output range referenced to the mobile station antenna input: -125 dBm to -149 dBm. Note that it may be necessary to utilize attenuators or other RF elements to achieve the required GPS signal levels at the mobile station antenna input. In all cases, the GPS L1 band noise power spectral density at the mobile station antenna input will be -174 dBm/Hz, which is equivalent to room temperature thermal noise.
- Amplitude resolution: 1 dB for all channels
- Output accuracy (relative levels between any two channels): ±1.0 dB
- Absolute output accuracy: ±2.0 dB
- Source VSWR: 2.0:1

The GPS simulator shall accept the following system timing signals, referenced to the GPS antenna port:

- 10 MHz frequency reference
- Even-second time mark

The GPS simulator shall provide the following timing signal, referenced to the CDMA station antenna port for use as triggers by other measurement equipment:

- 1 PPS signal

6.6 GNSS Simulator Equipment

The GNSS simulator shall be capable of all of the following:

- Generate six or seven[17] independent signals on the individual frequency for each supported GNSS.
- Set accurate satellite positions and timing, based on Ephemeris data input, where all Ephemeris parameter fields are populated.
- Set the signal phase dynamically, based on the satellite and user positions, with added offset derived from ionospheric, tropospheric and group delay models.

[17] Seven signals including SBAS may be generated for GNSS Accuracy test

- Simultaneously generate signals representing specified code phase and power level offsets for a given satellite.
- Set the user position to be stationary or in motion along a circular trajectory.
- Modulate the satellite signal with navigation bits with a specified bit stream in a manner that is consistent with the simulated GNSS system time.
- Start the simulation at a preset GNSS system time, triggered by an external signal.

The GNSS simulator shall meet the following minimum requirements:

- Frequency: Frequencies per the supported GNSS are listed in Table 6.6-1.

Table 6.6-1 Frequencies for Various GNSS Signal Types

	Galileo		**GPS/Modernized GPS**		**GLONASS***		**QZSS**		**SBAS**	
Frequency (MHz)	E1	1575.42	L1 C/A	1575.42	G1	$1602+K*\Delta f_1$	L1 C/A	1575.42	L1	1575.42
	E6	1278.75	L1C	1575.42	G2	$1246+K*\Delta f_2$	L1C	1575.42		
	E5a	1176.45	L2C	1227.6			L2C	1227.6		
	E5b	1207.14	L5	1176.45			L5	1176.45		

*Δf_1=562.5kHz, Δf_2=437.5kHz and K=-7~13

- Frequency accuracy: ±0.2 ppm
- Code phase accuracy (referenced to the 1 PPS output): ±20 ns
- Doppler resolution: 0.5 Hz
- Doppler accuracy: ±5 Hz
- Output range per the supported GNSS referenced to the mobile station antenna input is as specified in Table 6.6-2:

Table 6.6-2 Output Ranges for Various GNSS Signal Types

	Galileo		GPS/Modernized GPS		GLONASS		QZSS		SBAS	
Output range (dBm)	E1	-127~ -149	L1 C/A	-128.5~ -149	G1	-131~ -149	L1 C/A	-128.5	L1	-131
	E6	-125~ -147	L1C	-127~ -147.5	G2	-137~ -155	L1C	-127		
	E5	-125~ -147	L2C	-130~ -150.5			L2C	-130		
			L5	-124.9~ -145.4			L5	-124.9		

Note that it may be necessary to utilize attenuators or other RF elements to achieve the required GNSS signal levels at the mobile station antenna input. In all cases, the GNSS noise power spectral density at the mobile station antenna input will be -174 dBm/Hz, which is equivalent to room temperature thermal noise.

- Amplitude resolution: 1 dB for all channels
- Output accuracy (relative levels between any two channels): ±1.0 dB
- Absolute output accuracy: ±2.0 dB
- Source VSWR: 2.0:1
- GNSS-GNSS time offset accuracy: ±3ns

The GNSS simulator shall accept the following system timing signals, referenced to the GNSS antenna port:

- 10 MHz frequency reference
- Even-second time mark

The GNSS simulator should provide the following timing signal, referenced to the CDMA station antenna port for use as triggers by other measurement equipment:

- 1 PPS signal

6.7 Synchronization of the Serving Base Station and the GPS Simulator

Time synchronization between the serving base station and the GPS simulator is critical in some cases, since many MS implementations assume acquiring GPS system time from the CDMA network.

The synchronization may be achieved by using two separate connections:

1. For frequency synchronization, the serving base station's 10 MHz reference signal should be used. Optionally, the direction of the signal may be reversed so that the clock with higher precision is configured as the source.

2. For system time synchronization, the serving base station's even second signal should be used. Both the base station and the GPS simulator will be preset to start at the same predetermined reference time value at the occurrence of the first even second pulse. Optionally, the direction of the even second (or 1 PPS) signal may be reversed, so that the GPS simulator's timing signal serves as the source.

The synchronization between the base station and the GPS simulator shall meet the following minimum requirements:

- Frequency offset between the base station and the GPS simulator carriers (after frequency division to match the lower of the two frequencies) shall be less than ±0.02 ppm.
- Phase offset between the base station and the GPS simulator carriers (after frequency division to match the lower of the two frequencies) shall be constant within ±0.2 radians throughout the test.
- The timing offset between the serving base station and the GPS simulator (i.e. the offset between CDMA and GPS system time), referenced to the mobile station's antenna input, shall be less than ±30 ns.

If the requirement regarding the timing offset is not met, the use the following method is permissible, unless specified otherwise in a test:

1. Connect a clock/counter to the serving base station's even second pulse output and the GPS simulator's 1 PPS output, so that the clock measures the time difference between the active edges of the even second and the 1 PPS pulses. The clock/counter can use an internal time reference or, optionally, derive the internal time from the serving base station's or the GPS simulator's 10 MHz signal.
2. At the beginning of the measurement, record the measured time difference.
3. Before evaluation, correct the pseudorange measurements or the clock bias returned by the mobile station with the measured offsets.

When using the method described above, the achieved synchronization shall meet the following minimum requirements:

- The timing offset between the even second pulse and the 1 PPS pulse shall be less than ±10 μs.
- The timing offset between the even second signal and the 1 PPS signal shall be measured with accuracy better than ±10 ns.

6.8 Synchronization of the Serving Base Station and the GNSS Simulator

The synchronization between the serving base station and the GNSS simulator may be achieved by using two separate connections:

1. For frequency synchronization, the serving base station's 10 MHz reference signal should be used. Optionally, the direction of the signal may be reversed so that the clock with higher precision is configured as the source.

2. For system time synchronization, the serving base station's even second signal should be used. The base station simulator will be preset to start at the predetermined reference time value at the occurrence of the first even second pulse. The GNSS simulator will be preset to start $\Delta T_{GPS-GNSS}$ after the base station simulator starts. $\Delta T_{GPS-GNSS}$ is the GPS to GNSS system time offset. An advance in GPS system time relative to GNSS system time is represented by a positive $\Delta T_{GPS-GNSS}$ value.

The synchronization between the base station and the GNSS simulator shall meet the following minimum requirements:

- Frequency offset between the base station and the GNSS simulator carriers (after frequency division to match the lower of the two frequencies) shall be less than ±0.02 ppm.
- Phase offset between the base station and the GNSS simulator carriers (after frequency division to match the lower of the two frequencies) shall be constant within ±0.2 radians throughout the test.
- The timing offset between the serving base station and the GNSS simulator (i.e. the offset between CDMA and GNSS system time), referenced to the mobile station's antenna input, shall be less than ±30 ns off from the value $\Delta T_{GPS-GNSS}$.

If the requirement regarding the timing offset is not met, the use the following method is permissible, unless specified otherwise in a test:

1. Connect a clock/counter to the serving base station's even second pulse output and the GNSS simulator's 1 PPS output, so that the clock measures the time difference between the active edges of the even second and the 1 PPS pulses. The clock/counter can use an internal time reference or, optionally, derive the internal time from the serving base station's or the GNSS simulator's 10 MHz signal.
2. At the beginning of the measurement, record the measured time difference.
3. Before evaluation, correct the pseudorange measurements or the clock bias returned by the mobile station with the measured offsets.

When using the method described above, the achieved synchronization shall meet the following minimum requirements:

- The timing offset between the even second pulse and the 1 PPS pulse shall be less than ±10 μs.
- The timing offset between the even second signal and the 1 PPS signal shall be measured with accuracy better than ±10 ns.

6.9 AWGN Generator Equipment

The AWGN generator shall meet the following minimum performance requirements:

- Minimum bandwidth: 1.8 MHz for CDMA Spreading Rate 1. For the definition of Spreading Rate 1, see [2].

- The frequency ranges[18] are listed in Table 6.9-1.
- The noise power spectral density level in the GPS and GNSS bands shall not exceed –174 dBm/Hz at the mobile station antenna input.

Table 6.9-1 AWGN Generator Frequency Ranges

Band Class	Frequency Range (MHz)
0	864 to 899
1	1925 to 1985
2	912 to 965
3	827 to 875
4	1835 to 1875
5	416 to 499

- Frequency resolution: 10 kHz.
- Output accuracy: ±2 dB for outputs greater than or equal to -80 dBm/1.23 MHz.
- Amplitude resolution: 0.25 dB.
- Output range: -40 dBm/1.23 MHz to -95 dBm/1.23 MHz.
- The AWGN generator shall be uncorrelated to the ideal CDMA transmitter signals.

6.10 PDE Simulator Equipment

The PDE simulator equipment provides a uniform network assistance environment for every mobile station under test. Optionally, parts or all of the measurement data evaluation may also be carried out by the PDE simulator equipment.

The PDE simulator shall be capable to transmit and receive *Data Burst Messages* to and from the serving base station.

The PDE simulator shall recognize requests from the MS and shall appropriately respond to them. For this purpose, for tests that use *Position Determination Data Messages* with PD_MSG_TYPE='00000000', the PDE simulator shall be able to parse the received messages, extract the REQ_TYPE field and the COORD_TYPE field if REQ_TYPE = '0110' (Request GPS Location Assistance) and determine the time–of–arrival of the messages. The PDE simulator response will be solely determined by these three values, i.e. by the REQ_TYPE, COORD_TYPE and time–of–arrival of the request. These three values shall serve as indices into an array that stores all the PDE simulator responses. For tests that

[18] The frequency ranges are based on covering the receive band and frequencies as great as 5 MHz outside the band.

use *Position Determination Data Messages* with PD_MSG_TYPE='00000010', the PDE simulator shall be able to parse the received messages, extract the type of MS Request Element and the "Coordinate type requested" field in the *Request GPS Location Assistance* MS Request Element and determine the time–of–arrival of the messages. The PDE simulator response will be solely determined by these three values, i.e. by the type of MS Request Element, the value of "Coordinate type requested" field in the *Request GPS Location Assistance* MS Request Element and time–of–arrival of the request. These three values shall serve as indices into an array that stores all the PDE simulator responses.

The PDE simulator shall be capable of recording time–of–arrival of *Data Burst Messages* sent by the mobile station. The PDE simulator shall also be capable of recording mobile station response time, measured from the transmission of the end of the *Data Burst Message* containing the PDE request element to the reception of the end of the *Data Burst Message* containing the last part of the corresponding mobile station response element.

The PDE simulator shall meet the following minimum requirements:

- The PDE simulator shall support messages corresponding to all PDE capabilities
- Maximum Response time (measured from receipt of mobile station request): 200 ms
- Internal Time accuracy (referenced to base station system time): ±2 s
- Maximal Internal clock drift: 10^{-4} s/s

The PDE simulator shall accept the following timing signal:

- Even-second time mark.
- Trigger representing the start of the power control bit sequence.

6.10.1 PDE Simulator Responses

The PDE simulator responses are presented in Annex E. In Annex A, a normative description is given of the method of generating the PDE simulator responses.

6.10.2 *Position Determination Data Message* Call Flows

The PDE simulator shall adhere to the following call flows, based on the utilized Position Location Test Mode (see 1.4):

For non-GNSS test cases in 2, 4 and 5, *Position Determination Data Messages* with PD_MSG_TYPE = '00000000' or '00000010' shall be used:

1. Position Location Test Mode 1: The PDE simulator shall not send unsolicited response messages. The PDE simulator shall send solicited response messages to all requests received from the mobile station, according to 6.10.1, within the maximal response time specified in 6.10. An example of a successful Test Mode 1 call flow is shown in Figure 6.10.2-1.
2. Position Location Test Mode 2: The PDE simulator shall not send unsolicited response messages. The PDE simulator shall send solicited response messages to all requests received from the mobile station, according to 6.10.1, within the maximal response time

specified in 6.10. An example of a successful Test Mode 2 call flow is shown in Figure 6.10.2-1.

3. Position Location Test Mode 3: The PDE simulator shall initiate a position location session by sending a *Position Determination Data Message*, containing a *Request MS Information* message on the Paging Channel. The base station shall use the Paging Channel until the mobile station requests a dedicated channel. The base station shall not initiate service negotiation in Position Location Test Mode 3. After receiving the *Provide MS Information* response element, based on whether the mobile station is capable of location calculation, the PDE simulator shall initiate one of the following two call flows:

    1. If the mobile station is capable of location calculation (at least one of bits 1-8 of the LOC_CALC_CAP or "Position calculation capability" field[19] of the *Provide MS Information* response element is set to '1'), then the PDE simulator shall send a *Request Location Response* message. Subsequent to that, the PDE simulator shall not send unsolicited response messages. The PDE simulator shall send solicited response messages to all requests received from the mobile station, according to 6.10.1, within the maximal response time specified in 6.10. An example of a successful call flow is shown in Figure 6.10.2-2.

    2. If the mobile station is not capable of location calculation (none of bits 1-8 of the LOC_CALC_CAP or "Position calculation capability" field of the *Provide MS Information* response element is set to '1'), then the PDE simulator shall send a *Request Pseudorange Measurement* message, or a *Request Pilot Phase Measurement* message, or both. Subsequent to that, the PDE simulator shall not send unsolicited response messages. The PDE simulator shall send solicited response messages to all requests received from the mobile station, according to 6.10.1, within the maximal response time specified in 6.10. An example of a successful call flow is shown in Figure 6.10.2-3.

4. Position Location Test Mode 4: After the traffic channel assignment is indicated by the serving base station, the PDE simulator shall initiate a position location session by sending a *Position Determination Data Message*, containing a *Request MS Information* message. After receiving the *Provide MS Information* response element, based on whether the mobile station is capable of location calculation, the PDE simulator shall initiate one of the following two call flows:

    1. If the mobile station is capable of location calculation (at least one of bits 1-8 of the LOC_CALC_CAP or "Position calculation capability" field of the *Provide MS Information* response element is set to '1'), then the PDE simulator shall send a *Request Location Response* message. Subsequent to that, the PDE simulator shall not send unsolicited response messages. The PDE simulator shall send solicited response messages to all requests received from the mobile station, according to

[19] It is LOC_CALC_CAP if PD_MSG_TYPE='00000000' is used and it is "Position calculation capability" if PD_MSG_TYPE='00000010' is used.

6.10.1, within the maximal response time specified in 6.10. An example of a successful call flow is shown in Figure 6.10.2-2.

2. If the mobile station is not capable of location calculation (none of bits 1-8 of the LOC_CALC_CAP or "Position calculation capability" field of the *Provide MS Information* response element is set to '1'), then the PDE simulator shall send a *Request Pseudorange Measuremen*t message or a *Request Pilot Phase Measurement* message or both. Subsequent to that, the PDE simulator shall not send unsolicited response messages. The PDE simulator shall send solicited response messages to all requests received from the mobile station, according to 6.10.1, within the maximal response time specified in 6.10. An example of a successful call flow is shown in Figure 6.10.2-3.

For GNSS test cases, *Position Determination Data Messages* with PD_MSG_TYPE = '00000010' shall be used:

1. Position Location Test Mode 1: The PDE simulator shall not send unsolicited response messages. The PDE simulator shall send solicited response messages to all requests received from the mobile station, according to 6.10.1, within the maximal response time specified in 6.10. An example of a successful Test Mode 1 call flow is shown in Figure 6.10.2-4 for the mobile station that is capable of location calculation (at least one of bits 3-5 and 7-9 of the "Position Calculation Capability" field of the P*rovide Advanced MS Information* response element is set to '1'). An example of a successful Test Mode 1 call flow is shown in Figure 6.10.2-5 for the mobile station that is not capable of location calculation (none of bits 3-5 and 7-9 of the "Position Calculation Capability" field of the P*rovide Advanced MS Information* response element is set to '1').

2. Position Location Test Mode 2: The PDE simulator shall not send unsolicited response messages. The PDE simulator shall send solicited response messages to all requests received from the mobile station, according to 6.10.1, within the maximal response time specified in 6.10. An example of a successful Test Mode 2 call flow is shown in Figure 6.10.2-4 for the mobile station that is capable of location calculation (at least one of bits 3-5 and 7-9 of the "Position Calculation Capability" field of the P*rovide Advanced MS Information* response element is set to '1'). An example of a successful Test Mode 2 call flow is shown in Figure 6.10.2-5 for the mobile station that is not capable of location calculation (none of bits 3-5 and 7-9 of the "Position Calculation Capability" field of the P*rovide Advanced MS Information* response element is set to '1').

3. Position Location Test Mode 3: The PDE simulator shall initiate a position location session by sending a *Position Determination Data Message*, containing a *Request Advanced MS Information* message on the Paging Channel. The base station shall use the Paging Channel until the mobile station requests a dedicated channel. The base station shall not initiate service negotiation in Position Location Test Mode 3. After receiving the *Provide Advanced MS Information* response element, the PDE simulator shall send a *Request GNSS Pseudorange Measuremen*t message, or a *Request Pilot Phase Measurement* message, or both. Subsequent to that, the PDE simulator shall send solicited response messages to all requests received from the mobile station, according to 6.10.1, within the maximal response time specified in 6.10. An example of a successful call flow is shown in Figure 6.10.2-6.

4. Position Location Test Mode 4: After the traffic channel assignment is indicated by the serving base station, the PDE simulator shall initiate a position location session by sending a *Position Determination Data Message*, containing a *Request Advanced MS Information* message. After receiving the *Provide Advanced MS Information* message, the PDE simulator shall send a *Request GNSS Pseudorange Measurement* message, or a *Request Pilot Phase Measurement* message, or both. Subsequent to that, the PDE simulator shall send solicited response messages to all requests received from the mobile station, according to 6.10.1, within the maximal response time specified in 6.10. An example of a successful call flow is shown in Figure 6.10.2-6.

Figure 6.10.2-1 Example Successful Call Flow for Test Modes 1 and 2 for non-GNSS Test Cases

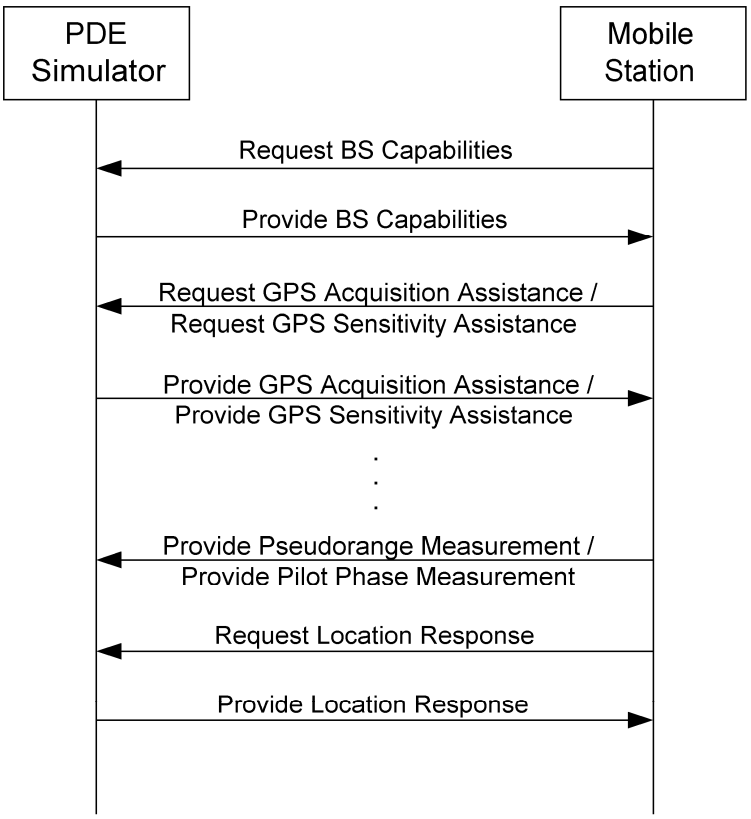

Figure 6.10.2-2 Example Successful Call Flow for Test Modes 3 and 4 for non-GNSS Test Cases, with Mobile Station that is Capable of Location Calculation

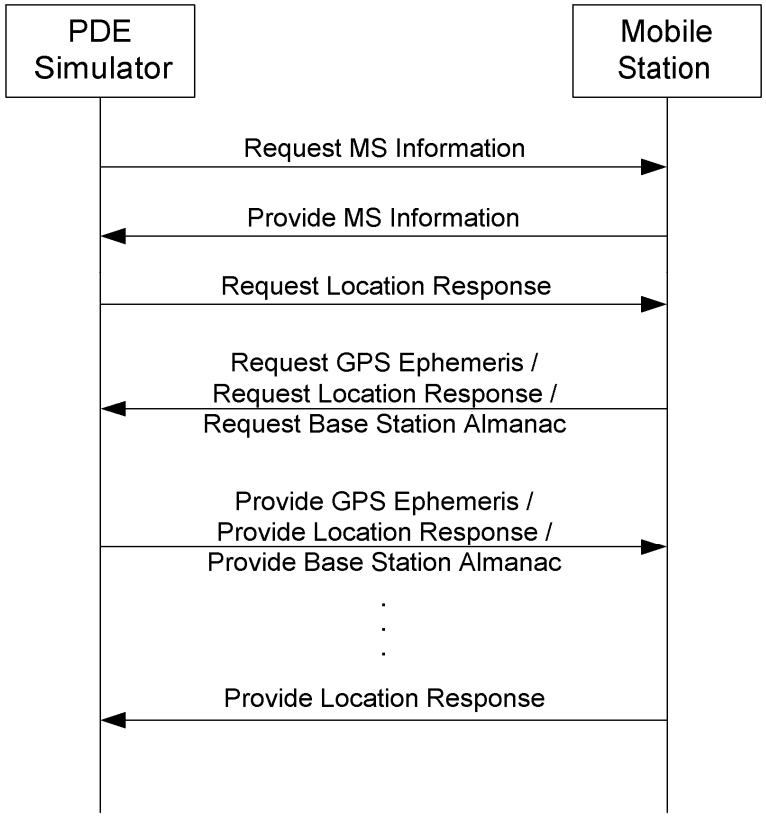

Figure 6.10.2-3 Example Successful Call Flow for Test Modes 3 and 4 for non-GNSS Test Cases, with Mobile Station that is not Capable of Location Calculation

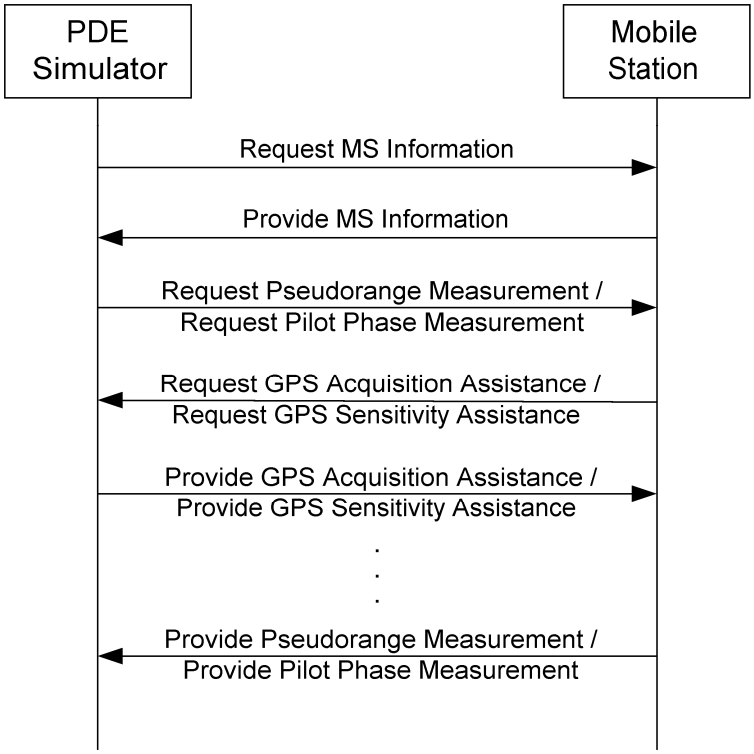

Figure 6.10.2-4 Example Successful Call Flow for Test Modes 1 and 2 for GNSS Test Cases, with Mobile Station that is Capable of Location Calculation

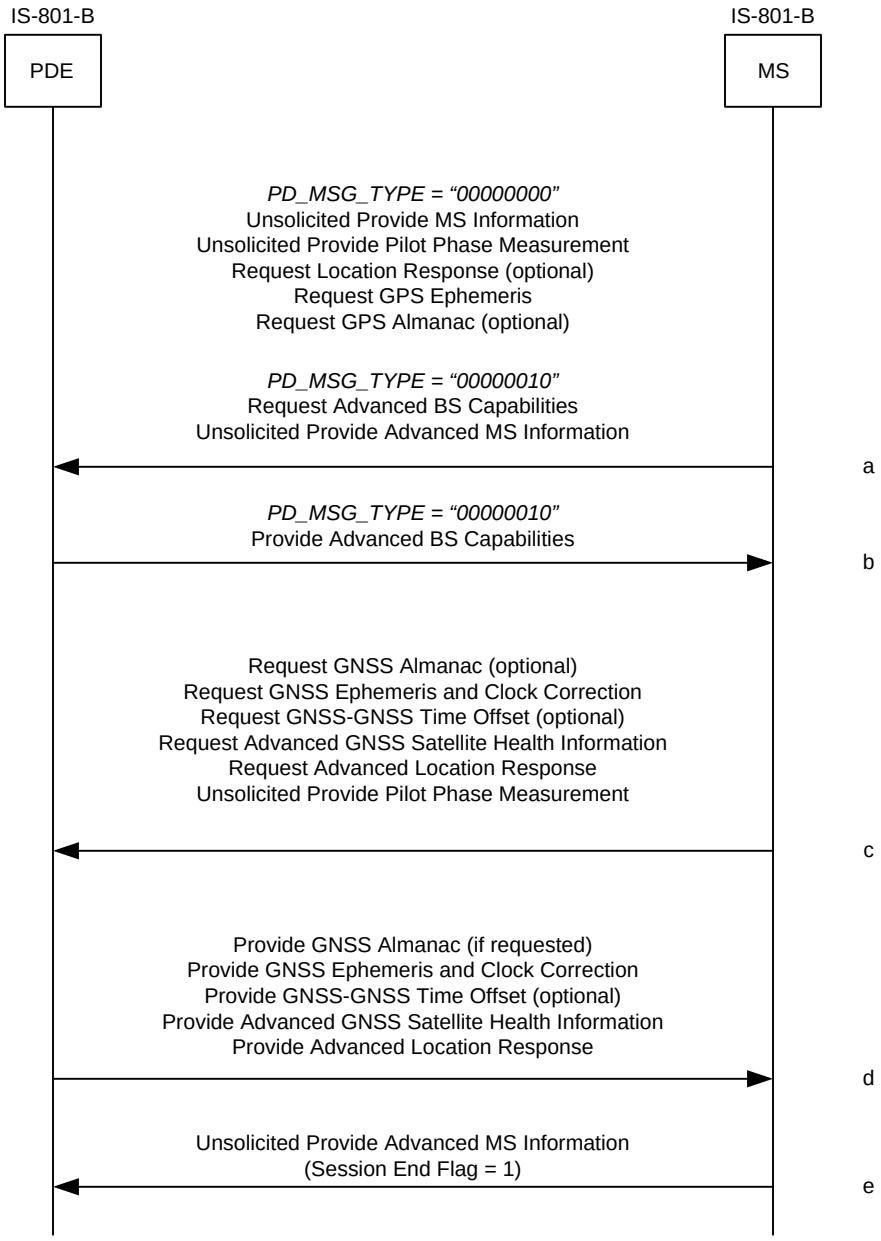

Figure 6.10.2-5 Example Successful Call Flow for Test Modes 1 and 2 for GNSS Test Cases, with Mobile Station that is not Capable of Location Calculation

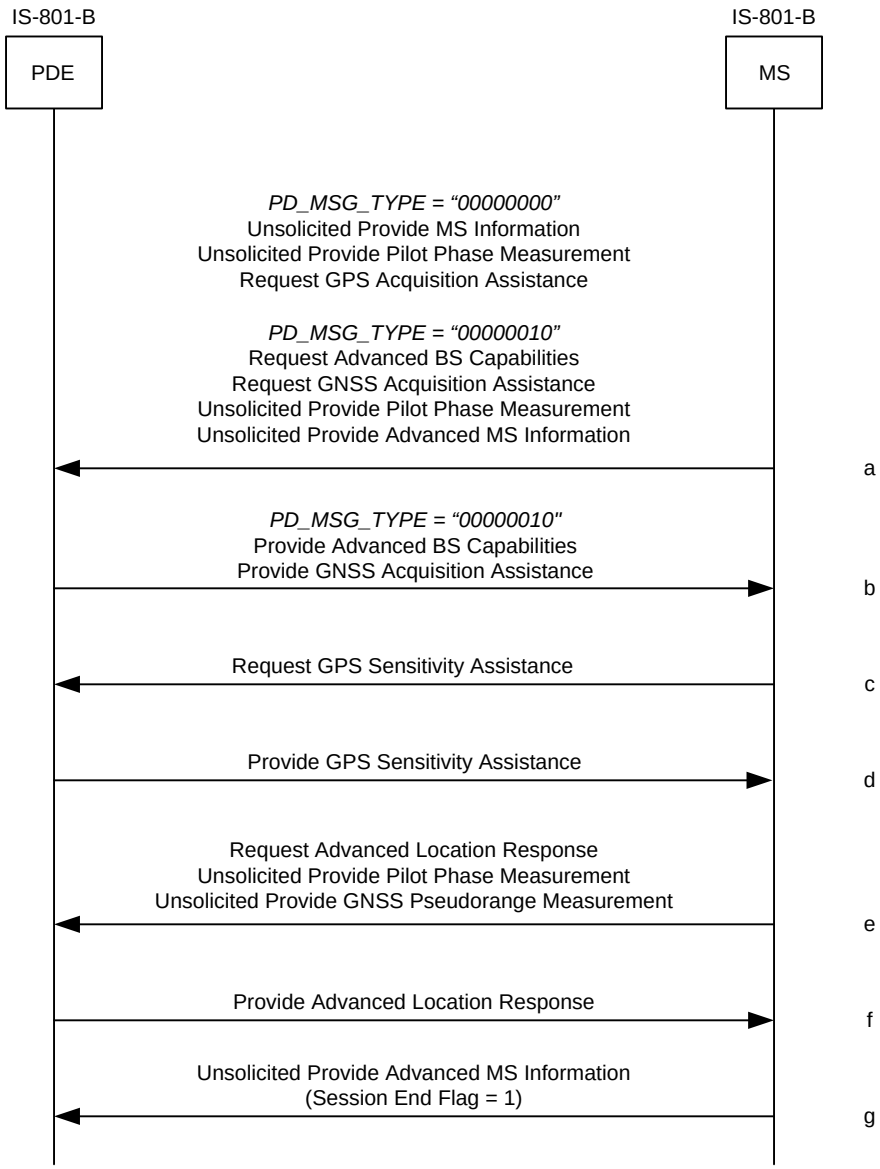
IS-801-B
PDE
IS-801-B
MS
PD_MSG_TYPE = "00000000"
Unsolicited Provide MS Information
Unsolicited Provide Pilot Phase Measurement
Request GPS Acquisition Assistance
PD_MSG_TYPE = "00000010"
Request Advanced BS Capabilities
Request GNSS Acquisition Assistance
Unsolicited Provide Pilot Phase Measurement
Unsolicited Provide Advanced MS Information
a
PD_MSG_TYPE = "00000010"
Provide Advanced BS Capabilities
Provide GNSS Acquisition Assistance
b
Request GPS Sensitivity Assistance
c
Provide GPS Sensitivity Assistance
d
Request Advanced Location Response
Unsolicited Provide Pilot Phase Measurement
Unsolicited Provide GNSS Pseudorange Measurement
e
Provide Advanced Location Response
f
Unsolicited Provide Advanced MS Information
(Session End Flag = 1)
g

1

2

Figure 6.10.2-6 Example Successful Call Flow for Test Modes 3 and 4 for GNSS Test Cases

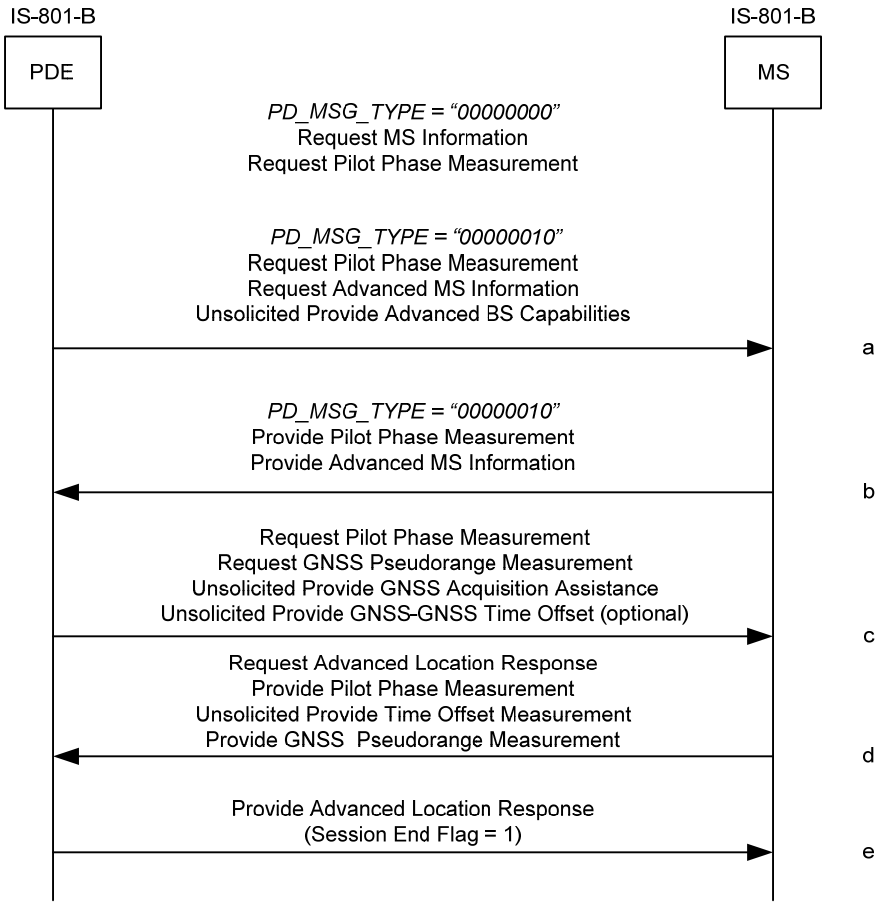

6.11 MS Logging Entity

The MS logging entity is essential for mobile station that is capable of calculating its position but does not return the final position to the network. The MS logging entity shall be used to log the position fixes generated by the mobile station that use the call flow indicated in Figure 6.10.2-4.

The MS logging entity could also be used to communicate with the mobile station on test-related matters such as preemption of assistance data such as Ephemeris, Almanac, or position results computed in the past.

The MS logging entity shall communicate with the mobile station using the asynchronous RS-232 protocol and standard Access Terminal (AT) comment mode via the serial port.

6.12 Functional System Set-ups

6.12.1 Functional Block Diagrams

Figure 6.12.1-1 through Figure 6.12.1-3 show the functional block diagrams of the set-up for the GPS, AFLT and Hybrid tests.

Figure 6.12.1-1 Functional Set-up for GPS Tests

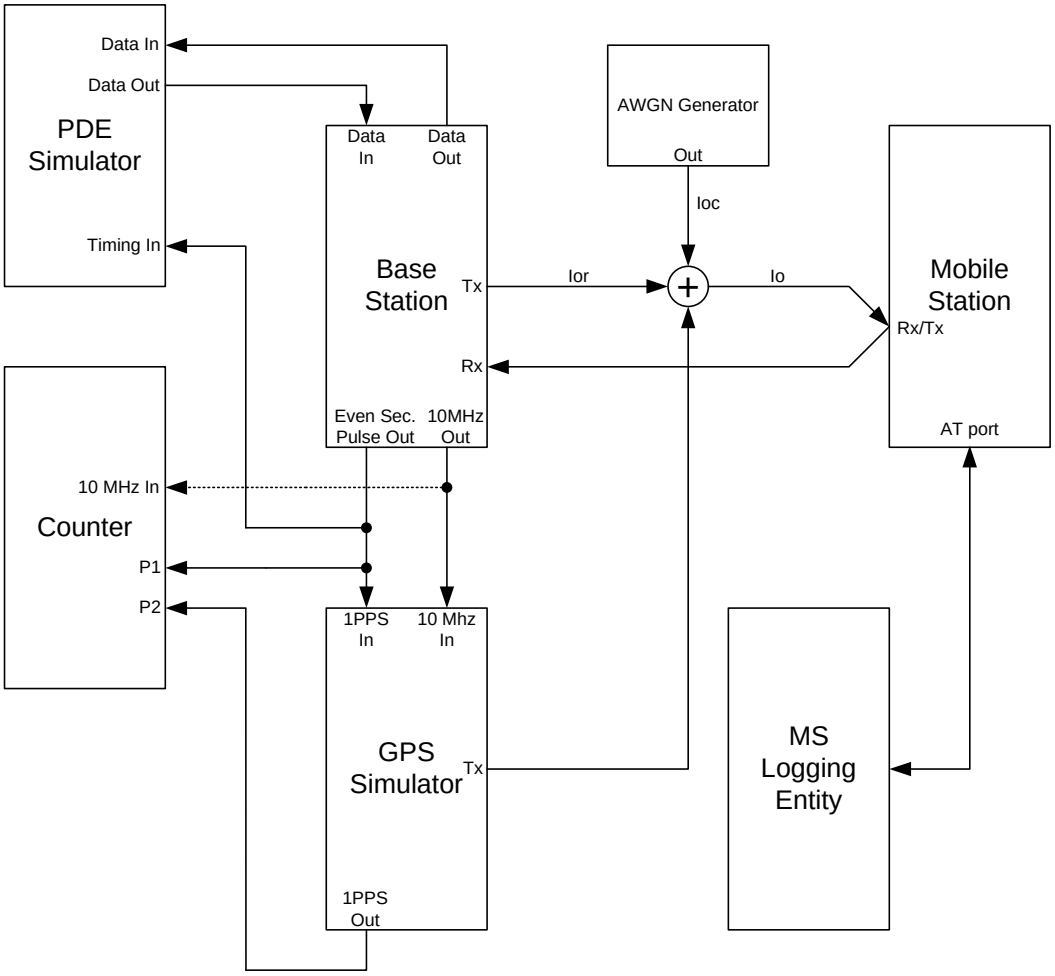

Figure 6.12.1-2 Functional Set-up for AFLT Tests

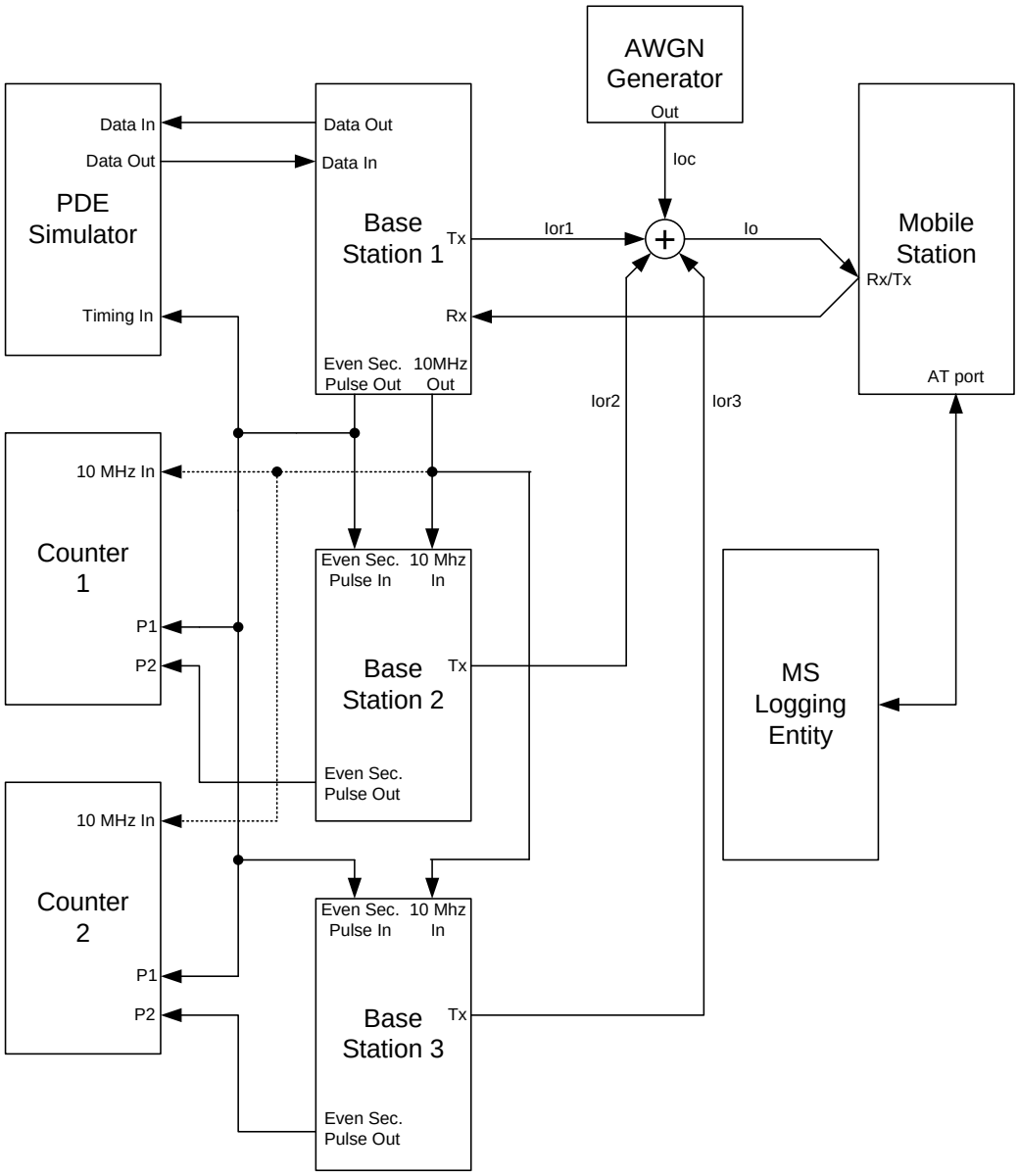

Figure 6.12.1-3 Functional Set-up for Hybrid Tests

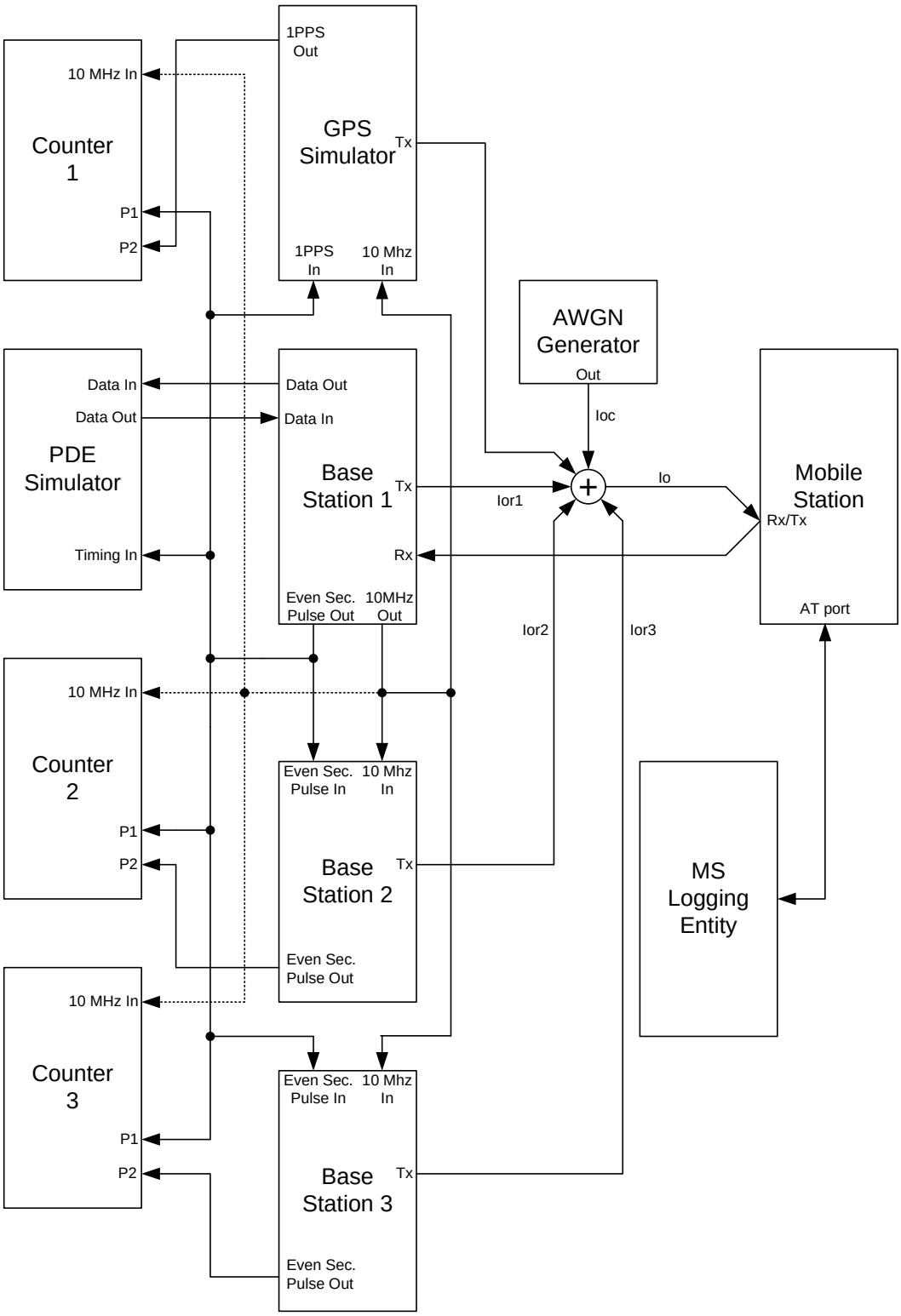

Figure 6.12.1-4 show the functional block diagrams of the set-up for the GNSS tests.

Figure 6.12.1-4 Functional Set-up for GNSS Tests

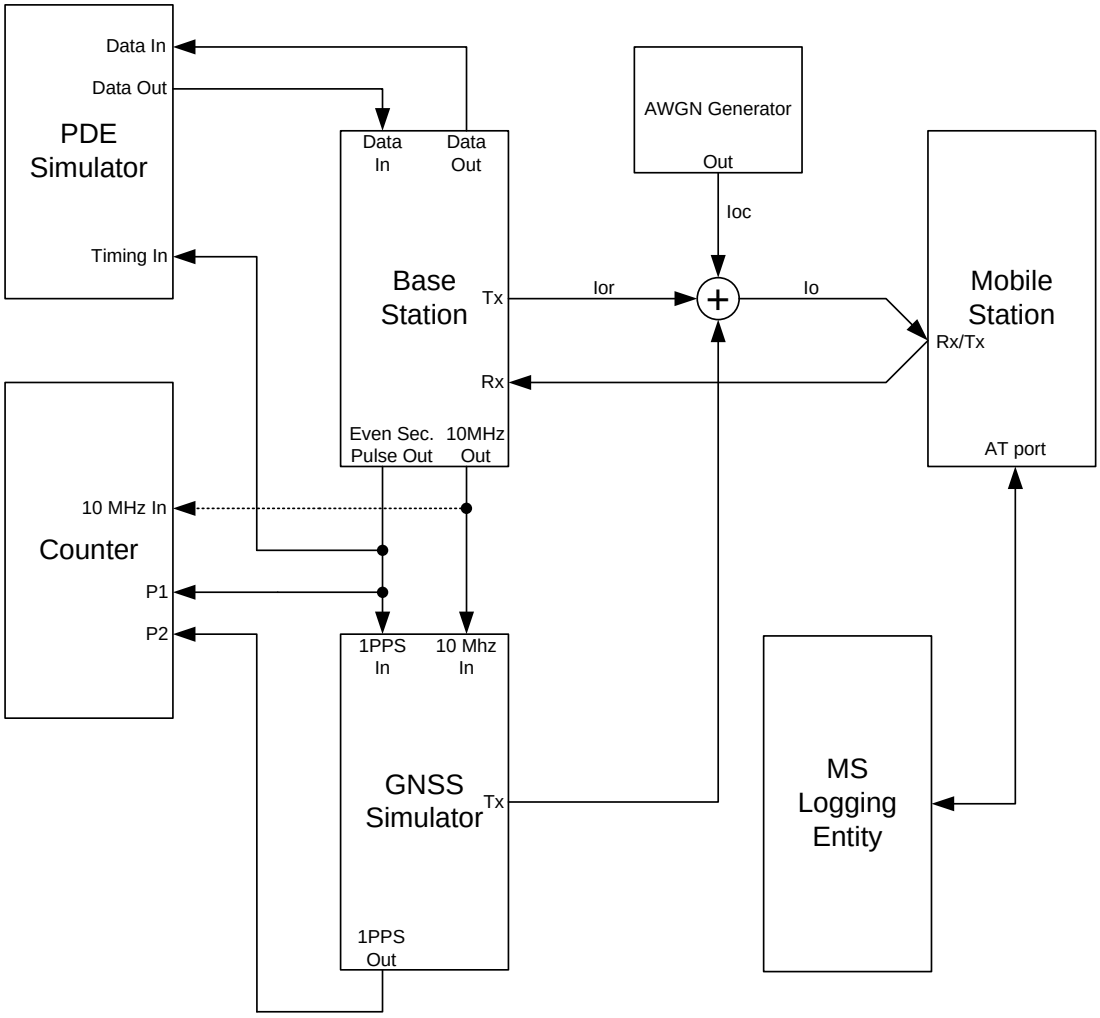

6.12.2 General Comments

The following comments apply to all tests:

1. The Forward CDMA Channel may be comprised of a Pilot Channel, a Sync Channel, a Paging Channel, a Traffic Channel, and other orthogonal channels (OCNS).
2. For all base stations, use Pilot E_c/I_{or} equal to -7 dB.
3. For the serving base station, use Traffic E_c/I_{or} equal to -15 dB with 9600 bps data rate (full rate, Rate Set 1).
4. For the serving base station, use Sync E_c/I_{or} equal to -16 dB and Paging E_c/I_{or} equal to -12 dB with Paging Channel data rate at 9600 bps.

5. Adjust the OCNS gain such that the power ratios (E_c/I_{or}) of all specified forward channels add up to one.
6. Pilot PN sequence offset indices are denoted by P_i (i = 0, 1, 2, …). The following assumptions hold unless otherwise specified:
    - $0 \le P_i \le 511$
    - $P_i \ne P_j$ if $i \ne j$
    - P_i mod PILOT_INC = 0

    The chosen PN-sequence offset values shall be consistent with the parameter settings in the base station overhead and PDE simulator GPS and GNSS assistance messages.
5. Base stations should be configured for normal operation as specified in [2], unless specifically stated differently in a specific test.
6. All forward link power control bits from the base station shall be set to '0'.
7. For a mobile station with an integral antenna, the manufacturer shall provide a calibrated RF coupling fixture to provide connection to the standard test equipment. This applies to all the CDMA,GPS and GNSS antenna connections.
8. Unless specified otherwise in test procedures, if the mobile station supports turbo coding on the Reverse Supplemental Channel, the test shall be performed with turbo coding of the Reverse Supplemental Channel; otherwise, the mobile station shall use convolutional coding of the Reverse Supplemental Channel.
9. Overhead message fields should be those needed for normal operation of the base station, unless stated differently in Table 6.12.2-1 through Table 6.12.2-4 or in a specific test.

Table 6.12.2-1 Special Field Values of the *System Parameters Message*

Field	Value (Decimal)
REG_PRD	0 (timer-based registration off)
SRCH_WIN_A	8 (60 chips)
SRCH_WIN_N	8 (60 chips)
SRCH_WIN_R	8 (60 chips)
NGHBR_MAX_AGE	0 (minimum amount of Neighbor Set aging)
PWR_THRESH_ENABLE	0 (threshold reporting off)
PWR_PERIOD_ENABLE	0 (periodic reporting off)
T_ADD	28 (-14 dB E_c/I_0)
T_DROP	32 (-16 dB E_c/I_0)

T_COMP	5 (2.5 dB)
T_TDROP	3 (4 sec)

Table 6.12.2-2 Special Field Value of the *Extended System Parameters Message*

Field	Value (Decimal)
SOFT_SLOPE	0 (0)

Table 6.12.2-3 Special Field Values of the *Access Parameters Message*

Field	Value (Decimal)
NOM_PWR	0 (0 dB)
NOM_PWR_EXT	0 (0 dB)
INIT_PWR	0 (0 dB)
PWR_STEP	0 (0 dB)
NUM_STEP	4 (5 probes per sequence)

Table 6.12.2-4 Special Field Values of the *General Neighbor List Message* for the Serving Base Station

Field	Value (Decimal)
PILOT_INC	1 (64 chips)
NGHBR_SRCH_MODE	0 (no priorities or windows)
NUM_NGHBR	8 (8 neighbors)
NGHBR_CONFIG	0
NGHBR_PN	P_1
NGHBR_CONFIG	0
NGHBR_PN	P_2
NGHBR_CONFIG	0
NGHBR_PN	P_3
NGHBR_CONFIG	0
NGHBR_PN	P_4
NGHBR_CONFIG	0
NGHBR_PN	P_5
NGHBR_CONFIG	0
NGHBR_PN	P_6
NGHBR_CONFIG	0
NGHBR_PN	P_7
NGHBR_CONFIG	0
NGHBR_PN	P_8

10. Values of time limits and other constants should be as specified in [11], [12]. Values of some time limits and constants are listed in Table 6.12.2 5 for reference.

Table 6.12.2-5 Time Limit and Constant Values

Constant	Value	Unit
N_{1m}	9	frames
N_{2m}	12	frames
N_{3m}	2	frames
N_{11m}	1	frame
T_{1b}	1.28	seconds
T_{5m}	5	seconds
T_{40m}	3	seconds
T_{61m}	0.08	seconds
T_{72m}	1	second

Annex A – METHOD OF GENERATING PDE SIMULATOR RESPONSES

This Annex is normative.

A.1 General Requirements for *Position Determination Data Message* Origination

A.1.1 *Data Burst Message* Origination

The PDE simulator shall comply with the requirements of Section 3 of [1]. The PDE simulator shall limit the *Data Burst Message* size to 200 bytes.

A.1.2 *Position Determination Data Message* Origination

The PDE simulator shall populate the *Position Determination Data Message* field according to Section 3.2.4 of [1]. In particular, for Test Modes 1 and 2, the value assignments are shown in Table A.1.2-1 if *Position Determination Data Messages* (PDDMs) with PD_MSG_TYPE='00000000' are used and are shown in Table A.1.2-2 if PDDMs with PD_MSG_TYPE='00000010' are used; for Test Modes 3 and 4, with a mobile station that is capable of position calculation, the value assignments are shown in Table A.1.2-3 if PDDMs with PD_MSG_TYPE='00000000' are used; and for Test Modes 3 and 4, with a mobile station that is not capable of position calculation, the value assignments are shown in Table A.1.2-4 if PDDMs with PD_MSG_TYPE='00000000' are used; and for Test Modes 3 and 4, the value assignments are shown in Table A.1.2-5 if PDDMs with PD_MSG_TYPE='00000010' are used.

Table A.1.2-1 *Position Determination Data Message* Format for Test Modes 1 and 2 if PD_MSG_TYPE='00000000'

Field	Value (Binary)
SESS_START	'0'
SESS_END	'0'
SESS_SOURCE	'1'
SESS_TAG	Same as in MS Request
PD_MSG_TYPE	'00000000'
NUM_REQUESTS	'0000'
NUM_RESPONSES	As specified in [1]
The base station shall include NUM_RESPONSES occurrences of the following record:	
RESERVED	'000'

UNSOL_RESP	‘0’
RESP_TYPE	Same as in MS Request
RESP_PAR_LEN	As specified in [1]
RESP_PAR_RECORD	As specified in [1]

Table A.1.2-2 *Position Determination Data Message* Format for Test Modes 1 and 2 if PD_MSG_TYPE=’00000010’

Field	Value (Binary)
SESS_START	‘0’
SESS_END	‘0’
SESS_SOURCE	‘1’
SESS_TAG	Same as in MS Request
PD_MSG_TYPE	‘00000010’
PD_MSG_LEN	As specified in [1]
The base station shall include 0 or 1 occurrences of the following record:	
PDU	As specified in [1]

Table A.1.2-3 *Position Determination Data Message* Format for Test Modes 3 and 4, with a Mobile Station that is Capable of Position Calculation, if PD_MSG_TYPE='00000000'

Field	Value (Binary)
SESS_START	'1' in first message, '0' otherwise
SESS_END	'0'
SESS_SOURCE	'0'
SESS_TAG	'00000'
PD_MSG_TYPE	'00000000'
NUM_REQUESTS	'0001' in first message, '0001' in second message, '0000' otherwise
NUM_RESPONSES	'0000' in first message, As specified in [1] otherwise

The base station shall include NUM_REQUESTS occurrences of the following record:

RESERVED	'0000'
REQ_TYPE	'0010' in first message, '0001' in second message
REQ_PAR_LEN	As specified in [1]
REQ_PAR_RECORD	As specified in [1]

The base station shall include NUM_RESPONSES occurrences of the following record:

RESERVED	'000'
UNSOL_RESP	'0'
RESP_TYPE	As specified in [1]
RESP_PAR_LEN	As specified in [1]
RESP_PAR_RECORD	As specified in [1]

Table A.1.2-4 *Position Determination Data Message* Format for Test Modes 3 and 4, with a Mobile Station that is not Capable of Position Calculation, if PD_MSG_TYPE='00000000'

Field	Value (Binary)
SESS_START	'1' in first message, '0' otherwise
SESS_END	'0'
SESS_SOURCE	'0'
SESS_TAG	'00000'
PD_MSG_TYPE	'00000000'
NUM_REQUESTS	'0001' in first message, '0001' or '0010' in second message, '0' otherwise
NUM_RESPONSES	'0000' in first message As specified in [1] otherwise

The base station shall include NUM_REQUESTS occurrences of the following record:

RESERVED	'0000'
REQ_TYPE	'0010' in first message, '0100' or '0101' or both '0100' and '0101' in second message, '0' otherwise
REQ_PAR_LEN	As specified in [1]
REQ_PAR_RECORD	As specified in [1]

The base station shall include NUM_RESPONSES occurrences of the following record:

RESERVED	'000'
UNSOL_RESP	'0'
RESP_TYPE	As specified in [1]
RESP_PAR_LEN	As specified in [1]
RESP_PAR_RECORD	As specified in [1]

Table A.1.2-5 *Position Determination Data Message* Format for Test Modes 3 and 4, if PD_MSG_TYPE='00000010'

Field	Value (Binary)
SESS_START	'1' in first message, '0' otherwise
SESS_END	'0'
SESS_SOURCE	'0'
SESS_TAG	'00000'
PD_MSG_TYPE	'00000010'
PD_MSG_LEN	As specified in [1]
The base station shall include 0 or 1 occurrences of the following record:	
PDU	As specified in [1]

A.1.3 *Position Determination Data Message* Segmentation

The PDE simulator shall divide messages into parts as necessary in order to meet the requirement listed in A.1.1. The message segmentation shall be performed according to the requirements listed in Section 3.2.2.1 of [1].

A.2 Method of Selecting the PDE Simulator Response Message

The PDE simulator shall respond to requests received from the mobile station by sending the corresponding response messages. The response messages are presented in Annex E for *Position Determination Data Messages* with PD_MSG_TYPE='00000000'. If *Position Determination Data Messages* with PD_MSG_TYPE='00000000' are used, the PDE simulator shall select the response message based on the received REQ_TYPE and COORD_TYPE, if REQ_TYPE = '0110' (*Request GPS Location Assistance*), and the time-of-arrival of the mobile station request. If *Position Determination Data Messages* with PD_MSG_TYPE='00000010' are used, the PDE simulator shall select the response message based on the received type of MS Request Element and the received value of "Coordinate type requested" field in the *Request GPS Location Assistance* MS Request Element, and the time-of-arrival of the mobile station request.

A.2.1 PDE Simulator Response Type

When responding to a mobile station request for which the *Position Determination Data Messages* with PD_MSG_TYPE='00000000' are used, the PDE response type shall be determined by the received REQ_TYPE and COORD_TYPE, if REQ_TYPE = '0110' (*Request GPS Location Assistance*) as listed in Table A.2.1-1.

Table A.2.1-1 PDE Simulator Response Types for PDDMs with PD_MSG_TYPE=’00000000’

MS Request	PDE Response
Request BS Capabilities	*Provide BS Capabilities*
Request GPS Acquisition Assistance	*Provide GPS Acquisition Assistance*
Request GPS Location Assistance COORD_TYPE = ’0’	*Provide GPS Location Assistance – Cartesian*
Request GPS Location Assistance COORD_TYPE = ’1’	*Provide GPS Location Assistance – Spherical*
Request GPS Sensitivity Assistance	*Provide GPS Sensitivity Assistance*
Request Base Station Almanac	*Provide Base Station Almanac*
Request GPS Almanac	*Provide GPS Almanac*
Request GPS Ephemeris	*Provide GPS Ephemeris*
Request GPS Navigation Message Bits	*Provide GPS Navigation Message Bits*
Request Location Response	*Provide Location Response*
Request GPS Almanac Correction	*Provide GPS Almanac Correction*
Request GPS Satellite Health Information	*Provide GPS Satellite Health Information*

When responding to a mobile station request for which the *Position Determination Data Messages* with PD_MSG_TYPE=’00000010’ are used, the PDE response type shall be determined by the received type of MS Request Element and the value of “Coordinate type requested” field in the *Request GPS Location Assistance* MS Request Element as listed in Table A.2.1-2.

Table A.2.1-2 PDE Simulator Response Types for PDDMs with PD_MSG_TYPE='00000010'

MS Request	PDE Response
Request BS Capabilities	*Provide BS Capabilities*
Request GPS Acquisition Assistance	*Provide GPS Acquisition Assistance*
Request GPS Location Assistance with "Coordinate type requested" = '0'	*Provide GPS Location Assistance – Cartesian*
Request GPS Location Assistance with "Coordinate type requested" = '1'	*Provide GPS Location Assistance – Spherical*
Request GPS Sensitivity Assistance	*Provide GPS Sensitivity Assistance*
Request Base Station Almanac	*Provide Base Station Almanac*
Request GPS Almanac	*Provide GPS Almanac*
Request GPS Ephemeris	*Provide GPS Ephemeris*
Request GPS Navigation Message Bits	*Provide GPS Navigation Message Bits*
Request Location Response	*Provide Location Response*
Request GPS Almanac Correction	*Provide GPS Almanac Correction*
Request GPS Satellite Health Information	*Provide GPS Satellite Health Information*
Request Advanced BS Capabilities	*Provide Advanced BS Capabilities*
Request GNSS Acquisition Assistance	*Provide GNSS Acquisition Assistance*
Request GNSS Sensitivity Assistance	*Provide GNSS Sensitivity Assistance*
Request Modernized GPS Almanac	*Provide Modernized GPS Almanac*
Request QZSS Almanac	*Provide QZSS Almanac*
Request GLONASS Almanac	*Provide GLONASS Almanac*
Request Galileo Almanac	*Provide Galileo Almanac*
Request GEO Almanacs Message Parameters	*Provide GEO Almanacs Message Parameters*
Request Modernized GPS Ephemeris and Clock Correction	*Provide Modernized GPS Ephemeris and Clock Correction*
Request QZSS Ephemeris and Clock Correction	*Provide QZSS Ephemeris and Clock Correction*
Request GLONASS Ephemeris and Clock Correction	*Provide GLONASS Ephemeris and Clock Correction*
Request Galileo Ephemeris and Clock Correction	*Provide Galileo Ephemeris and Clock Correction*
Request GEO Navigation Message	*Provide GEO Navigation Message*

Parameters	*Parameters*
Request Advanced Location Response	*Provide Advanced Location Response*
Request GPS Ionospheric Model	*Provide GPS Ionospheric Model*
Request Galileo Ionospheric Model	*Provide Galileo Ionospheric Model*
Request QZSS Ionospheric Model	*Provide QZSS Ionospheric Model*
Request GNSS-GNSS Time Offset	*Provide GNSS-GNSS Time Offset*
Request GPS UTC Model	*Provide GPS UTC Model*
Request Advanced GNSS Satellite Health Information	*Provide Advanced GNSS Satellite Health Information*

A.2.2 PDE Simulator Response Reference Time

When responding to a mobile station request, the PDE simulator shall determine the response reference time based on the time-of-arrival of the request and the stepsize for the response time. The stepsize for the response time here means the time step between consecutive response messages of the same type contained in Annex E. The number of possible PDE simulator response messages for a given message type is obtained by dividing the maximal supported test duration by the resolution of the reference time for that message type. For message types for which Table A.2.2-1 and Table A.2.2-2 list 'N/A' as resolution of reference time, there is only one possible PDE simulator response. The PDE simulator shall support maximal test duration of at least 60 minutes for non-GNSS test cases in 2, 4 and 5 and shall support test duration of 15 minutes for GNSS test cases in 3.

Table A.2.2-1 PDE Simulator Response Reference Time Information for Non-GNSS Test Cases

PDE Response	Reference Time Field	Stepsize for Response Time	Selection of Reference Time Note: t_{ref} = Reference Time, t_{req} = Time-of-Arrival of Mobile Station Request
Provide BS Capabilities	N/A	N/A	N/A
Provide GPS Acquisition Assistance	TIME_OF_APP or "CDMA system time at the time when the acquisition assistance data is applicable"	1.28 s	$t_{req} + 2 \le t_{ref} < t_{req} + 3.28$
Provide GPS Location Assistance – Cartesian	Implicit	1.28 s	Same as in *Provide GPS Acquisition Assistance* message
Provide GPS Location Assistance – Spherical	Implicit	1.28 s	Same as in *Provide GPS Acquisition Assistance* message
Provide GPS Sensitivity Assistance	REF_BIT_NUM or "Reference bit number"	1.28 s	$t_{req} + 5 < t_{ref} \le t_{req} + 6.28$
Provide Base Station Almanac	N/A	N/A	N/A
Provide GPS Almanac	WEEK_NUM or "GPS week number of the almanac"	N/A	104
	TOA or "Reference time of the almanac"	N/A	16384
Provide GPS Ephemeris	IODE	N/A	Same as in reference Ephemeris
	TOE or t_{oe}	N/A	324000
Provide GPS Navigation Message Bits	Implicit, start of next GPS frame	6 s	$t_{req} < t_{ref} \le t_{req} + 6$

Provide Location Response	TIME_REF_CDMA or "CDMA system time at the time the solution is valid"	1.28 s	$t_{req} \le t_{ref} < t_{req} + 1.28$
Provide GPS Almanac Correction	REF_TIME or "The time of validity of the parameters reported in this response element"	10.24 s	$t_{req} + 2 \le t_{ref} < t_{req} + 3.28$
	WEEK_NUM or "GPS week number"	N/A	Same as in reference Almanac
	TOA or "Time of almanac"	N/A	Same as in reference Almanac
Provide GPS Satellite Health Information	N/A	N/A	N/A

1

Table A.2.2-2 PDE Simulator Response Reference Time Information for GNSS Test Cases

PDE Response	**Reference Time Field**	**Stepsize for Response Time**	**Selection of Reference Time** **Note: t_{ref} = Reference Time, t_{req} = Time-of-Arrival of Mobile Station Request $T_{NavBits}$ = Length of "Nav message bits" in Seconds of *Provide GNSS Sensitivity Assistance* Message**
Provide BS Capabilities	N/A	N/A	N/A
Provide GPS Acquisition Assistance	CDMA system time at the time when the acquisition assistance data is applicable	1.28 s	$t_{req} + 2 \le t_{ref} < t_{req} + 3.28$
Provide GPS Location Assistance – Cartesian	Implicit	1.28 s	Same as in *Provide GPS Acquisition Assistance* message
Provide GPS Location Assistance – Spherical	Implicit	1.28 s	Same as in *Provide GPS Acquisition Assistance* message
Provide GPS Sensitivity Assistance	Reference bit number	1.28 s	$t_{req} + 5 < t_{ref} \le t_{req} + 6.28$
Provide Base Station Almanac	N/A	N/A	N/A
Provide GPS Almanac	GPS week number of the almanac	N/A	533
	Reference time of the almanac	N/A	405504
Provide GPS Ephemeris	IODE	N/A	Same as in reference Ephemeris
	t_{oe}	N/A	230400
Provide GPS Navigation	Implicit, start of	6 s	$t_{req} < t_{ref} \le t_{req} + 6$

Message Bits	next GPS frame		
Provide Location Response	CDMA system time at the time the solution is valid	1.28 s	$t_{req} \le t_{ref} < t_{req} + 1.28$
Provide GPS Almanac Correction	The time of validity of the parameters reported in this response element	10.24 s	$t_{req} + 2 \le t_{ref} < t_{req} + 3.28$
	GPS week number	N/A	Same as in reference Almanac
	Time of almanac	N/A	Same as in reference Almanac
Provide GPS Satellite Health Information	N/A	N/A	N/A
Provide Advanced BS Capabilities	N/A	N/A	N/A
Provide GNSS Acquisition Assistance	Reference time	1.28 s	$t_{req} + 2 \le t_{ref} < t_{req} + 3.28$
Provide GNSS Sensitivity Assistance	Reference bit number	1.28 s	$t_{req} + \lfloor T_{NavBits} / 2 \rfloor < t_{ref} \le t_{req} + \lfloor T_{NavBits} / 2 \rfloor + 1.28$
Provide Advanced UMB Base Station Almanac	N/A	N/A	N/A
Provide Advanced HRPD Base Station Almanac	N/A	N/A	N/A
Provide Advanced 1x Base Station Almanac	N/A	N/A	N/A

Provide Modernized GPS Almanac	WN_{a-n}	N/A	Not specified
	t_{oa}	N/A	Not specified
Provide QZSS Almanac	WN_{a-n}	N/A	Not specified
	t_{oa}	N/A	Not specified
Provide GLONASS Almanac	N^A	N/A	679
	N_4	N/A	4
Provide Galileo Almanac	Week Number	N/A	Not specified
	T_{oa}	N/A	Not specified
	IOD_a	N/A	Not specified
Provide GEO Almanacs Message Parameters	t_0	N/A	Not specified
Provide Modernized GPS Ephemeris and Clock Correction	t_{oe}	N/A	Not specified
	t_{oc}	N/A	Not specified
Provide QZSS Ephemeris and Clock Correction	t_{oe} (NAV Ephemeris)	N/A	Not specified
	t_{oc} (NAV Ephemeris)	N/A	Not specified
	t_{oe} (CNAV/CNAV2 Ephemeris)	N/A	Not specified
	t_{oc} (CNAV/CNAV2 Ephemeris)	N/A	Not specified
Provide GLONASS Ephemeris and Clock Correction	t_b	N/A	1065
Provide	IOD	N/A	Not specified

Galileo Ephemeris and Clock Correction	t_{oe}	N/A	Not specified
Provide GEO Navigation Message Parameters	IOD	N/A	Not specified
	t_0	N/A	Not specified
Provide Advanced Location Response	Reference time	1.28 s	$t_{req} \leq t_{ref} < t_{req} + 1.28$
Provide GPS Ionospheric Model	N/A	N/A	N/A
Provide Galileo Ionospheric Model	N/A	N/A	N/A
Provide QZSS Ionospheric Model	N/A	N/A	N/A
Provide GNSS-GNSS Time Offset	N/A	N/A	N/A
Provide GPS UTC Model	N/A	N/A	N/A
Provide Advanced GNSS Satellite Health Information	N/A	N/A	N/A
Provide DGNSS Assistance	DGNSS reference time	1.28 s	$t_{req} \leq t_{ref} < t_{req} + 1.28$

1

2

3

4

A.3 Method of Determining the PDE Simulator Response Values

A.3.1 Setting of PDE Simulator Response Field Counters

For tests that use PDDMs with PD_MSG_TYPE='00000000', the PDE simulator shall set the field counters as listed in Table A.3.1-1.

The values of fields PART_NUM and TOTAL_PARTS, when applicable, shall be set by the PDE simulator according to A.1.3.

Table A.3.1-1 PDE Simulator Response Field Counter Settings

PDE Response	Field Counter	Value (Binary)	Total Number in All Parts of the Response
Provide GPS Acquisition Assistance	NUM_SV	Number of SVs above 18° elevation angle – 1 = ’1000’	No segmentation
	DOPP_INCL	‘1’	N/A
	ADD_DOPP_INCL	‘1’	N/A
	CODE_PH_PAR_INCL	‘1’	N/A
	AZ_EL_INCL	‘1’	N/A
Provide GPS Location Assistance – Cartesian	NUM_DLY	‘000’	No segmentation
	NUM_SV	Same as in *Provide GPS Acquisition Assistance* message	No segmentation
Provide GPS Location Assistance – Spherical	NUM_DLY	‘000’	No segmentation
	NUM_SV	Same as in *Provide GPS Acquisition Assistance* message	No segmentation
Provide GPS Sensitivity Assistance	NUM_DR_P	As needed	Number of SVs above 18° elevation angle = 9
	DR_SIZE	‘11111111’	N/A
	NUM_SV_DR	‘0’	N/A
Provide Base Station Almanac	NUM_PILOTS_P	’000001001’	No segmentation
	LOC_SAME_AS_PREV	‘0’	N/A
Provide GPS Almanac	NUM_SV_P	As needed	Number of SVs in reference Almanac = 26
Provide GPS Ephemeris	NUM_SV_P	As needed	Number of SVs above 18° elevation angle = 9
	AB_PAR_INCL	‘1’	N/A
Provide GPS Navigation Message Bits	NUM_SV_P	As needed	Number of SVs above 18° elevation angle = 9
	SUBF_4_5_INCL	‘0’	N/A
Provide	VELOCITY_INCL	‘0’	N/A

Location Response	CLOCK_INCL	'0'	N/A
	HEIGHT_INCL	'1'	N/A
Provide GPS Almanac Correction	NUM_SV_P	Number of SVs above 18° elevation angle – 1 = '1000'	No segmentation
	DELTA_XYZ_INCL	'1'	N/A
	DELTA_CLOCK_INCL	'1'	N/A
Provide GPS Satellite Health Information	BAD_SV_PRESENT	'0'	N/A

For tests that use PDDMs with PD_MSG_TYPE='00000010', the PDE simulator shall use the ASN.1 encoding to provide the GNSS assistance data for the intended number of GNSS satellites as specified in A.1. The values of fields "Part number" and "Total number of parts", when applicable, shall be set by the PDE simulator according to A.1.3.

A.3.2 Calculating of PDE Simulator Numerical Parameter Values

The PDE simulator response numerical data values shall be calculated according to the definitions of Section 2.5 of [7] as well as [17~2323], and Sections 3.2.4.2 and 3.2.4.3.2 of [1].

Furthermore, the following procedures shall apply:

- Pseudorange, Doppler and Doppler rate of change values shall be calculated according to [17~23], based on the reference Ephemeris. Ionospheric and tropospheric corrections shall be applied as described in [17~23]. The serving base station's location shall be used as the reference location, and the time indicated by TIME_OF_APP or "CDMA system time at the time when the acquisition assistance data is applicable" in the *Provide Acquisition Assistance* message or indicated by "Reference time" in the *Provide GNSS Acquisition Assistance* message shall be used as the reference time. Location coordinates shall be interpreted according to [3]. The rounding or truncation of the resulting values shall be carried out according to Sections 3.2.4.2 and 3.2.4.3.2 of [1].
- The GPS and GNSS Almanac, Ephemeris and navigation bit data shall be set according to the GPS and GNSS simulator data, respectively.

A.3.3 Setting of PDE Simulator Response Information Parameters

Unless otherwise indicated in specific tests, the PDE simulator shall set the response information parameters according to Table A.3.3-1.

The parameter values included in the *Provide Location Response* or the *Provide Advanced Location Response* message were determined based on the assumption that the message may be sent as assistance to the mobile station before any measurements are made. The same *Provide Location Response* or the *Provide Advanced Location Response* message shall be sent by the PDE simulator to the mobile station regardless of whether it is requested before or after any measurements are made; thus, it does not reflect the positioning accuracy that could be obtained from the measurements.

Table A.3.3-1 PDE Simulator Response Information Parameters

PDE Response	Field	Value (Binary)
Provide BS Capabilities	BS_LS_REV or "Base station location standard revision number"	'000000'
	GPSC_ID or "GPS capability indicator"	'1'
	AFLTC_ID or "Advanced forward link trilateration capability indicator"	'1'
	APDC_ID or "Autonomous position determination capability indicator"	'00000000'
Reject	REJ_REQ_TYPE or "Reject request type"	As needed, same as in MS request
	REJ_REASON or "Reject reason"	'001'
Provide GPS Acquisition Assistance	REFERENCE_PN or "Reference PN"	P_0
	SV_CODE_PH_WIN or "Code phase window"	'01011'
	DOPPLER_WIN or "Doppler search window"	'100'
Provide Base Station Almanac	TIME_CRRCTION_REF or "Reference time correction"	'010111101'
	TIME_CORRECTION or "Reference time correction" within Data record	'010111101'
Provide Location Response	FIX_TYPE or "Fix type"	'1'
Provide Advanced BS Capabilities	"BS location rev number"	'2'
	"Supported GNSS"	As needed

	"AFLT capability indicator"	'0000000000xxxx 1x'[20]
Advanced Reject	"Reject request type"	As needed, same as in MS request
	"Reject reason"	'1'
Provide GNSS Acquisition Assistance	"Pilot PN sequence offset"	P_0
	"Code phase search window"	'11'
	"Doppler search window"	'4'
Provide Advanced Location Response	"Fix type"	As needed

1

2 A.3.4 Setting of PDE Simulator Request Information Parameters

3 Unless otherwise indicated in specific tests, the PDE simulator shall set the request
4 information parameters according to Table A.3.4-1.

5

[20] 'x' means don't care.

Table A.3.4-1 PDE Simulator Request Information Parameters

PDE Request	Field	Value (Binary)
Request Pseudorange Measurement	PREF_RESP_QUAL or "Preferred response quality"	'100' for GPS Dynamic Range Test, '011' otherwise
	NUM_FIXES or "Number of fixes"	'00000000'
	T_BETW_FIXES or "Time between fixes"	'00010000'
	OFFSET_REQ or "Offset requested"	'1'
Request Pilot Phase Measurement	PREF_RESP_QUAL or "Preferred response quality"	'011' for AFLT Protocol Tests, '010' otherwise
	NUM_FIXES or "Number of fixes"	'00000000'
	T_BETW_FIXES or "Time between fixes"	'00010000'
	OFFSET_REQ or "Offset requested"	'1'
	DESI_PIL_PH_RES or "Desired pilot phase resolution"	'1'
Request Location Response	PREF_RESP_QUAL or "Preferred response quality"	'010' for AFLT Tests, '011' for GPS and Hybrid Tests
	NUM_FIXES or "Number of fixes"	'00000000'
	T_BETW_FIXES or "Time between fixes"	'00010000'
	HEIGHT_REQ or "Height information requested"	'1'
	CLK_COR_GPS_REQ or "Clock correction for GPS time requested"	'1'
	VELOCITY_REQ or "Velocity information requested"	'1'

Request GNSS Pseudorange Measurement	"Preferred response quality"	'100' for GNSS Dynamic Range Test, '011' for other GNSS Tests
	"Number of fixes"	'1'
	"Time between fixes"	'16'
Request Advanced Location Response	"Maximum response time"	'100' for all GNSS Tests
	"Number of fixes"	'1'
	"Time between fixes"	'18'
	"Height information request"	'1'
	"Clock correction for GPS time request"	'1'
	"Horizontal velocity information request"	'1'
	"Vertical velocity information request"	'1'

1

2

Annex B – REFERENCE GPS NAVIGATION DATA, SYSTEM TIME AND USER LOCATION

This Annex is normative.

B.1 Reference Location

For all tests defined in this document, the PDE simulator response messages shall be consistent with (i.e. all assistance data shall be valid at) the following reference location:

- Lat: + 37° 00' 00.0000"
- Lon: - 122° 00' 00.0000"
- Height: + 100.00 m (above the WGS-84 Reference Ellipsoid)

B.2 Reference Time

For all tests defined in this document, the reference time (start time of the test) shall be as follows:

- GPS Time: Week 1127 (WIN:0103), TOW: 320320 (Wednesday, 16:58:40)
- Local Time (Pacific Standard Time): 2001 August 15, 08:58:27 am
- Local Time (Pacific Daylight Time): 2001 August 15, 09:58:27 am

The test equipment shall support a test duration of 1 hour.

B.3 Reference Ephemeris

For all tests defined in this document, the following reference Ephemeris data shall be used. Note that the first number after the parameter name is the binary value of the corresponding message field defined in [1]; the second number (in parentheses) is the scaling factor expressed in powers of two; and the third number is the floating-point representation. For the applicable units, see [17]. Note that the IODE values shown below are not mandatory. Any IODE value can be used, as long as the PDE simulator response messages (see Annex E) are kept consistent with the settings of the GPS simulator.

```
alpha0  : 16 (2^-30)          1.49011611938477e-008
alpha1  : 3 (2^-27)           2.23517417907715e-008
alpha2  : -2 (2^-24)          -1.19209289550781e-007
alpha3  : -2 (2^-24)          -1.19209289550781e-007
beta0   : 55 (2^11)           112640
beta1   : 8 (2^14)            131072
beta2   : -2 (2^16)           -131072
beta3   : -3 (2^16)           -196608

************SATELLITE: 3***************
ID      : 3
PRN ID  : 3
IODE    : 2
```

```
Crs      : 1751 (2^-5)          54.71875
delta_n  : 13612 (2^-43)        1.54750523506664e-009
M_0      : 1554268988 (2^-31)   0.723762897774577
Cuc      : 1505 (2^-29)         2.80328094959259e-006
e        : 18979682 (2^-33)     0.00220952578820288
Cus      : 5898 (2^-29)         1.09858810901642e-005
SQRT(A)  : 2702017974 (2^-19)   5153.6902885437
toe      : 20250 (2^4)          324000
Cic      : -27 (2^-29)          -5.02914190292358e-008
OMEGA_0  : -598861499 (2^-31)   -0.278866616543382
Cis      : -27 (2^-29)          -5.02914190292358e-008
i0       : 639774141 (2^-31)    0.297918050084263
Crc      : 4897 (2^-5)          153.03125
omega    : 392157920 (2^-31)    0.182612761855125
OMEGADOT: -22673 (2^-43)        -2.5776216716622e-009
IDOT     : -1344 (2^-43)        -1.52795109897852e-010
toc      : 20250 (2^4)          324000
af2      : 0 (2^-55)            0
af1      : 30 (2^-43)           3.41060513164848e-012
af0      : 122521 (2^-31)       5.70532865822315e-005

************SATELLITE: 14***************
ID       : 14
PRN ID   : 14
IODE     : 2
Crs      : -4016 (2^-5)         -125.5
delta_n  : 11923 (2^-43)        1.35548816615483e-009
M_0      : 627487520 (2^-31)    0.292196646332741
Cuc      : -3440 (2^-29)        -6.40749931335449e-006
e        : 20828844 (2^-33)     0.00242479657754302
Cus      : 5468 (2^-29)         1.01849436759949e-005
SQRT(A)  : 2702005606 (2^-19)   5153.66669845581
toe      : 20250 (2^4)          324000
Cic      : 19 (2^-29)           3.53902578353882e-008
OMEGA_0  : 1577408628 (2^-31)   0.734538132324815
Cis      : 0 (2^-29)            0
i0       : 659197995 (2^-31)    0.306962986942381
Crc      : 5906 (2^-5)          184.5625
omega    : -318920472 (2^-31)   -0.148508917540312
OMEGADOT: -22013 (2^-43)        -2.50258835876593e-009
IDOT     : 241 (2^-43)          2.73985278909095e-011
toc      : 20250 (2^4)          324000
af2      : 0 (2^-55)            0
af1      : -9 (2^-43)           -1.02318153949454e-012
af0      : -259636 (2^-31)      -0.000120902433991432
```

```
1   ************SATELLITE: 15***************
2   ID       : 15
3   PRN ID   : 15
4   IODE     : 2
5   Crs      : 3520 (2^-5)           110
6   delta_n  : 11425 (2^-43)         1.29887212096946e-009
7   M_0      : 783064363 (2^-31)     0.364642759319395
8   Cuc      : 2968 (2^-29)          5.52833080291748e-006
9   e        : 70170715 (2^-33)      0.00816894636955112
10  Cus      : 2420 (2^-29)          4.50760126113892e-006
11  SQRT(A)  : 2702005530 (2^-19)    5153.66655349731
12  toe      : 20250 (2^4)           324000
13  Cic      : -28 (2^-29)           -5.21540641784668e-008
14  OMEGA_0  : 196273480 (2^-31)     0.0913969613611698
15  Cis      : -111 (2^-29)          -2.06753611564636e-007
16  i0       : 669824293 (2^-31)     0.311911242548376
17  Crc      : 9659 (2^-5)           301.84375
18  omega    : 1184210256 (2^-31)    0.551440872251987
19  OMEGADOT: -22831 (2^-43)         -2.59558419202222e-009
20  IDOT     : 754 (2^-43)           8.57198756420985e-011
21  toc      : 20250 (2^4)           324000
22  af2      : 0 (2^-55)             0
23  af1      : 40 (2^-43)            4.54747350886464e-012
24  af0      : 150252 (2^-31)        6.99665397405624e-005
25
26  ************SATELLITE: 17***************
27  ID       : 17
28  PRN ID   : 17
29  IODE     : 2
30  Crs      : 3234 (2^-5)           101.0625
31  delta_n  : 11586 (2^-43)         1.31717570184264e-009
32  M_0      : 21453549 (2^-31)      0.00999008724465966
33  Cuc      : 2836 (2^-29)          5.28246164321899e-006
34  e        : 114688506 (2^-33)     0.0133514993358403
35  Cus      : 2103 (2^-29)          3.9171427488327e-006
36  SQRT(A)  : 2702016898 (2^-19)    5153.68823623657
37  toe      : 20250 (2^4)           324000
38  Cic      : 99 (2^-29)            1.84401869773865e-007
39  OMEGA_0  : 223657985 (2^-31)     0.104148865211755
40  Cis      : -24 (2^-29)           -4.4703483581543e-008
41  i0       : 671066978 (2^-31)     0.312489912845194
42  Crc      : 10023 (2^-5)          313.21875
43  omega    : 2143332909 (2^-31)    0.998067161533982
44  OMEGADOT: -23226 (2^-43)         -2.64049049292225e-009
45  IDOT     : 765 (2^-43)           8.69704308570363e-011
46  toc      : 20250 (2^4)           324000
```

```
af2     : 0 (2^-55)             0
af1     : 226 (2^-43)           2.56932253250852e-011
af0     : 771310 (2^-31)        0.000359169207513332

************SATELLITE: 18***************
ID      : 18
PRN ID  : 18
IODE    : 2
Crs     : -2414 (2^-5)          -75.4375
delta_n : 13174 (2^-43)         1.49771040014457e-009
M_0     : -412701330 (2^-31)    -0.192179032601416
Cuc     : -2089 (2^-29)         -3.89106571674347e-006
e       : 18954306 (2^-33)      0.0022065716329962
Cus     : 1071 (2^-29)          1.99489295482636e-006
SQRT(A) : 2701992381 (2^-19)    5153.64147377014
toe     : 20250 (2^4)           324000
Cic     : -12 (2^-29)           -2.23517417907715e-008
OMEGA_0 : 898577843 (2^-31)     0.418432915117592
Cis     : 2 (2^-29)             3.72529029846191e-009
i0      : 656996200 (2^-31)     0.305937696248293
Crc     : 10900 (2^-5)          340.625
omega   : 1845863650 (2^-31)    0.859547243453562
OMEGADOT: -23748 (2^-43)        -2.69983502221294e-009
IDOT    : -213 (2^-43)          -2.42152964347042e-011
toc     : 20250 (2^4)           324000
af2     : 0 (2^-55)             0
af1     : -2 (2^-43)            -2.27373675443232e-013
af0     : -158560 (2^-31)       -7.38352537155151e-005

************SATELLITE: 21***************
ID      : 21
PRN ID  : 21
IODE    : 2
Crs     : -2326 (2^-5)          -72.6875
delta_n : 12066 (2^-43)         1.37174538394902e-009
M_0     : -1590806617 (2^-31)   -0.74077705712989
Cuc     : -2100 (2^-29)         -3.91155481338501e-006
e       : 149802739 (2^-33)     0.0174393340712413
Cus     : 819 (2^-29)           1.52550637722015e-006
SQRT(A) : 2701986661 (2^-19)    5153.63056373596
toe     : 20250 (2^4)           324000
Cic     : 94 (2^-29)            1.7508864402771e-007
OMEGA_0 : 869520218 (2^-31)     0.404901904053986
Cis     : -79 (2^-29)           -1.47148966789246e-007
i0      : 668563068 (2^-31)     0.311323938891292
Crc     : 11468 (2^-5)          358.375
```

```
omega    : -1656971549 (2^-31)   -0.771587504539639
OMEGADOT: -22726 (2^-43)         -2.58364707406145e-009
IDOT     : 246 (2^-43)           2.79669620795175e-011
toc      : 20250 (2^4)           324000
af2      : 0 (2^-55)             0
af1      : 1 (2^-43)             1.13686837721616e-013
af0      : 9981 (2^-31)          4.64776530861855e-006

************SATELLITE: 23***************
ID       : 23
PRN ID   : 23
IODE     : 2
Crs      : -2351 (2^-5)          -73.46875
delta_n  : 11761 (2^-43)         1.33707089844393e-009
M_0      : -1378456920 (2^-31)   -0.641894023865461
Cuc      : -1911 (2^-29)         -3.55951488018036e-006
e        : 132793870 (2^-33)     0.0154592411126941
Cus      : 923 (2^-29)           1.71922147274017e-006
SQRT(A)  : 2701831446 (2^-19)    5153.33451461792
toe      : 20250 (2^4)           324000
Cic      : 100 (2^-29)           1.86264514923096e-007
OMEGA_0  : 898428473 (2^-31)     0.418363359291106
Cis      : 42 (2^-29)            7.82310962677002e-008
i0       : 670774976 (2^-31)     0.312353938817978
Crc      : 11248 (2^-5)          351.5
omega    : -1245550721 (2^-31)   -0.580004752147943
OMEGADOT: -22412 (2^-43)         -2.54794940701686e-009
IDOT     : 22 (2^-43)            2.50111042987555e-012
toc      : 20250 (2^4)           324000
af2      : 0 (2^-55)             0
af1      : 6 (2^-43)             6.82121026329696e-013
af0      : 39215 (2^-31)         1.8260907381773e-005

************SATELLITE: 29***************
ID       : 29
PRN ID   : 29
IODE     : 2
Crs      : -4216 (2^-5)          -131.75
delta_n  : 11731 (2^-43)         1.33366029331228e-009
M_0      : 1396677043 (2^-31)    0.650378429796547
Cuc      : -3652 (2^-29)         -6.80238008499146e-006
e        : 71698904 (2^-33)      0.0083468509837985
Cus      : 5364 (2^-29)          9.99122858047485e-006
SQRT(A)  : 2702123387 (2^-19)    5153.89134788513
toe      : 20250 (2^4)           324000
Cic      : 9 (2^-29)             1.67638063430786e-008
```

```
OMEGA_0 : 1563399006 (2^-31)    0.7280143937096
Cis     : -103 (2^-29)          -1.91852450370789e-007
i0      : 659786730 (2^-31)     0.307237138040364
Crc     : 6053 (2^-5)           189.15625
omega   : -1269281011 (2^-31)   -0.591055029537529
OMEGADOT: -21749 (2^-43)        -2.47257503360743e-009
IDOT    : 259 (2^-43)           2.94448909698986e-011
toc     : 20250 (2^4)           324000
af2     : 0 (2^-55)             0
af1     : 17 (2^-43)            1.93267624126747e-012
af0     : 1346363 (2^-31)       0.00062694912776351

************SATELLITE: 31***************
ID      : 31
PRN ID  : 31
IODE    : 2
Crs     : 1383 (2^-5)           43.21875
delta_n : 13054 (2^-43)         1.48406797961798e-009
M_0     : 971966542 (2^-31)     0.452607191167772
Cuc     : 1228 (2^-29)          2.28732824325562e-006
e       : 87696983 (2^-33)      0.0102092724991962
Cus     : 6029 (2^-29)          1.12298876047134e-005
SQRT(A) : 2702009354 (2^-19)    5153.67384719849
toe     : 20250 (2^4)           324000
Cic     : -100 (2^-29)          -1.86264514923096e-007
OMEGA_0 : -588296382 (2^-31)    -0.273946850560606
Cis     : 7 (2^-29)             1.30385160446167e-008
i0      : 645775312 (2^-31)     0.300712563097477
Crc     : 5024 (2^-5)           157
omega   : 592891816 (2^-31)     0.276086766272783
OMEGADOT: -22745 (2^-43)        -2.58580712397816e-009
IDOT    : -1607 (2^-43)         -1.82694748218637e-010
toc     : 20250 (2^4)           324000
af2     : 0 (2^-55)             0
af1     : 17 (2^-43)            1.93267624126747e-012
af0     : 125895 (2^-31)        5.86244277656078e-005
```

B.4 Reference Almanac

For all tests defined in this document, the following reference Almanac data shall be used. Note that the first number after the parameter name is the binary value of the corresponding message field defined in [1]; the second number (in parentheses) is the scaling factor expressed in powers of two; and the third number is the floating-point representation. For the applicable units, see [17].

```
WIN=104
toa : 4 (2^12)                16384

************SATELLITE: 1***************
PRN ID  : 1
delta_i : 3839 (2^-19)        0.00732231140136719
M_0     : -709057 (2^-23)     -0.0845261812210083
e       : 10598 (2^-21)       0.00505352020263672
SQRT(A) : 10554807 (2^-11)    5153.71435546875
OMEGA_0 : 5901355 (2^-23)     0.703496336936951
omega   : -4575499 (2^-23)    -0.54544198513031
OMEGADOT: -687 (2^-38)        -2.49929144047201e-009
af1     : 1 (2^-38)           3.63797880709171e-012
af0     : 201 (2^-20)         0.000191688537597656

************SATELLITE: 2***************
PRN ID  : 2
delta_i : -1649 (2^-19)       -0.00314521789550781
M_0     : 8006721 (2^-23)     0.954475522041321
e       : 44805 (2^-21)       0.021364688873291
SQRT(A) : 10554554 (2^-11)    5153.5908203125
OMEGA_0 : -5549822 (2^-23)    -0.661590337753296
omega   : -5393208 (2^-23)    -0.64292049407959
OMEGADOT: -723 (2^-38)        -2.63025867752731e-009
af1     : -2 (2^-38)          -7.27595761418343e-012
af0     : -65 (2^-20)         -6.19888305664063e-005

************SATELLITE: 3***************
PRN ID  : 3
delta_i : -1115 (2^-19)       -0.00212669372558594
M_0     : 4373628 (2^-23)     0.521377086639404
e       : 4634 (2^-21)        0.00220966339111328
SQRT(A) : 10554758 (2^-11)    5153.6904296875
OMEGA_0 : -2667259 (2^-23)    -0.317962050437927
omega   : 1531867 (2^-23)     0.182612776756287
OMEGADOT: -709 (2^-38)        -2.57932697422802e-009
af1     : 1 (2^-38)           3.63797880709171e-012
af0     : 61 (2^-20)          5.81741333007813e-005

************SATELLITE: 4***************
PRN ID  : 4
delta_i : 5180 (2^-19)        0.00988006591796875
M_0     : -2766861 (2^-23)    -0.329835534095764
e       : 11382 (2^-21)       0.00542736053466797
SQRT(A) : 10554840 (2^-11)    5153.73046875
OMEGA_0 : 317784 (2^-23)      0.0378828048706055
```

```
omega   : -1101514 (2^-23)    -0.131310701370239
OMEGADOT: -678 (2^-38)        -2.46654963120818e-009
af1     : -5 (2^-38)          -1.81898940354586e-011
af0     : 629 (2^-20)         0.000599861145019531

************SATELLITE: 5***************
PRN ID  : 5
delta_i : -1140 (2^-19)       -0.00217437744140625
M_0     : -3255290 (2^-23)    -0.388060808181763
e       : 6206 (2^-21)        0.00295925140380859
SQRT(A) : 10554460 (2^-11)    5153.544921875
OMEGA_0 : -5494160 (2^-23)    -0.65495491027832
omega   : 1091980 (2^-23)     0.130174160003662
OMEGADOT: -724 (2^-38)        -2.6338966563344e-009
af1     : 0 (2^-38)           0
af0     : 325 (2^-20)         0.000309944152832031

************SATELLITE: 6***************
PRN ID  : 6
delta_i : 165 (2^-19)         0.000314712524414063
M_0     : -416309 (2^-23)     -0.0496279001235962
e       : 14416 (2^-21)       0.00687408447265625
SQRT(A) : 10554647 (2^-11)    5153.63623046875
OMEGA_0 : -2545582 (2^-23)    -0.303457021713257
omega   : -6075586 (2^-23)    -0.724266290664673
OMEGADOT: -692 (2^-38)        -2.51748133450747e-009
af1     : 0 (2^-38)           0
af0     : -3 (2^-20)          -2.86102294921875e-006

************SATELLITE: 7***************
PRN ID  : 7
delta_i : 454 (2^-19)         0.000865936279296875
M_0     : 4956962 (2^-23)     0.59091591835022
e       : 25192 (2^-21)       0.0120124816894531
SQRT(A) : 10554774 (2^-11)    5153.6982421875
OMEGA_0 : -2625876 (2^-23)    -0.313028812408447
omega   : -5357772 (2^-23)    -0.638696193695068
OMEGADOT: -694 (2^-38)        -2.52475729212165e-009
af1     : -9 (2^-38)          -3.27418092638254e-011
af0     : 416 (2^-20)         0.000396728515625

************SATELLITE: 8***************
PRN ID  : 8
delta_i : 2813 (2^-19)        0.00536537170410156
M_0     : 382759 (2^-23)      0.0456284284591675
e       : 16794 (2^-21)       0.00800800323486328
```

```
SQRT(A) : 10554740 (2^-11)    5153.681640625
OMEGA_0 : -8055571 (2^-23)    -0.960298895835876
omega   : 5432166 (2^-23)     0.647564649581909
OMEGADOT: -672 (2^-38)        -2.44472175836563e-009
af1     : 7 (2^-38)           2.5465851649642e-011
af0     : 513 (2^-20)         0.000489234924316406

************SATELLITE: 9***************
PRN ID  : 9
delta_i : 505 (2^-19)         0.000963211059570313
M_0     : -1092959 (2^-23)    -0.130290865898132
e       : 25411 (2^-21)       0.0121169090270996
SQRT(A) : 10554686 (2^-11)    5153.6552734375
OMEGA_0 : -8197457 (2^-23)    -0.977213025093079
omega   : 1966584 (2^-23)     0.234435081481934
OMEGADOT: -685 (2^-38)        -2.49201548285782e-009
af1     : -1 (2^-38)          -3.63797880709171e-012
af0     : -4 (2^-20)          -3.814697265625e-006

************SATELLITE: 10***************
PRN ID  : 10
delta_i : 6000 (2^-19)        0.011444091796875
M_0     : 8097346 (2^-23)     0.96527886390686
e       : 9435 (2^-21)        0.00449895858764648
SQRT(A) : 10554528 (2^-11)    5153.578125
OMEGA_0 : 3052626 (2^-23)     0.363901376724243
omega   : 238987 (2^-23)      0.0284894704818726
OMEGADOT: -717 (2^-38)        -2.60843080468476e-009
af1     : 0 (2^-38)           0
af0     : 9 (2^-20)           8.58306884765625e-006

************SATELLITE: 11***************
PRN ID  : 11
delta_i : -3527 (2^-19)       -0.00672721862792969
M_0     : 7618680 (2^-23)     0.908217430114746
e       : 2164 (2^-21)        0.00103187561035156
SQRT(A) : 10554691 (2^-11)    5153.65771484375
OMEGA_0 : 115484 (2^-23)      0.0137667655944824
omega   : -6792224 (2^-23)    -0.809696197509766
OMEGADOT: -719 (2^-38)        -2.61570676229894e-009
af1     : 0 (2^-38)           0
af0     : 4 (2^-20)           3.814697265625e-006

************SATELLITE: 13***************
PRN ID  : 13
delta_i : 4536 (2^-19)        0.0086517333984375
```

```
M_0     : -6993686 (2^-23)    -0.833712339401245
e       : 4071 (2^-21)        0.00194120407104492
SQRT(A) : 10554723 (2^-11)    5153.67333984375
OMEGA_0 : 5844615 (2^-23)     0.696732401847839
omega   : 168349 (2^-23)      0.0200687646865845
OMEGADOT: -685 (2^-38)        -2.49201548285782e-009
af1     : 0 (2^-38)           0
af0     : -4 (2^-20)          -3.814697265625e-006

************SATELLITE: 14***************
PRN ID  : 14
delta_i : 3655 (2^-19)        0.00697135925292969
M_0     : 754499 (2^-23)      0.0899432897567749
e       : 5085 (2^-21)        0.00242471694946289
SQRT(A) : 10554709 (2^-11)    5153.66650390625
OMEGA_0 : 5833984 (2^-23)     0.695465087890625
omega   : -1245783 (2^-23)    -0.148508906364441
OMEGADOT: -688 (2^-38)        -2.5029294192791e-009
af1     : 0 (2^-38)           0
af0     : -127 (2^-20)        -0.000121116638183594

************SATELLITE: 15***************
PRN ID  : 15
delta_i : 6258 (2^-19)        0.0119361877441406
M_0     : 1362090 (2^-23)     0.162373781204224
e       : 17132 (2^-21)       0.00816917419433594
SQRT(A) : 10554709 (2^-11)    5153.66650390625
OMEGA_0 : 438693 (2^-23)      0.0522962808609009
omega   : 4625821 (2^-23)     0.551440834999084
OMEGADOT: -713 (2^-38)        -2.59387888945639e-009
af1     : 1 (2^-38)           3.63797880709171e-012
af0     : 75 (2^-20)          7.15255737304688e-005

************SATELLITE: 17***************
PRN ID  : 17
delta_i : 6562 (2^-19)        0.0125160217285156
M_0     : -1614368 (2^-23)    -0.192447662353516
e       : 28000 (2^-21)       0.0133514404296875
SQRT(A) : 10554754 (2^-11)    5153.6884765625
OMEGA_0 : 545551 (2^-23)      0.0650347471237183
omega   : 8372394 (2^-23)     0.998067140579224
OMEGADOT: -726 (2^-38)        -2.64117261394858e-009
af1     : 7 (2^-38)           2.5465851649642e-011
af0     : 385 (2^-20)         0.000367164611816406

************SATELLITE: 18***************
```

```
PRN ID  : 18
delta_i : 3109 (2^-19)        0.00592994689941406
M_0     : -3306685 (2^-23)    -0.394187569618225
e       : 4628 (2^-21)        0.00220680236816406
SQRT(A) : 10554658 (2^-11)    5153.6416015625
OMEGA_0 : 3181809 (2^-23)     0.379301190376282
omega   : 7210405 (2^-23)     0.859547257423401
OMEGADOT: -742 (2^-38)        -2.69938027486205e-009
af1     : 0 (2^-38)           0
af0     : -77 (2^-20)         -7.34329223632813e-005

************SATELLITE: 20***************
PRN ID  : 20
delta_i : 3240 (2^-19)        0.0061798095703125
M_0     : -7906351 (2^-23)    -0.942510485649109
e       : 4718 (2^-21)        0.00224971771240234
SQRT(A) : 10554829 (2^-11)    5153.72509765625
OMEGA_0 : 3042589 (2^-23)     0.362704873085022
omega   : 5562936 (2^-23)     0.663153648376465
OMEGADOT: -730 (2^-38)        -2.65572452917695e-009
af1     : -1 (2^-38)          -3.63797880709171e-012
af0     : -97 (2^-20)         -9.25064086914063e-005

************SATELLITE: 21***************
PRN ID  : 21
delta_i : 5941 (2^-19)        0.0113315582275391
M_0     : -7908237 (2^-23)    -0.942735314369202
e       : 36573 (2^-21)       0.0174393653869629
SQRT(A) : 10554635 (2^-11)    5153.63037109375
OMEGA_0 : 3068592 (2^-23)     0.365804672241211
omega   : -6472545 (2^-23)    -0.771587491035461
OMEGADOT: -710 (2^-38)        -2.58296495303512e-009
af1     : 0 (2^-38)           0
af0     : 5 (2^-20)           4.76837158203125e-006

************SATELLITE: 23***************
PRN ID  : 23
delta_i : 6477 (2^-19)        0.0123538970947266
M_0     : -7058884 (2^-23)    -0.841484546661377
e       : 32420 (2^-21)       0.0154590606689453
SQRT(A) : 10554029 (2^-11)    5153.33447265625
OMEGA_0 : 3181604 (2^-23)     0.379276752471924
omega   : -4865433 (2^-23)    -0.580004811286926
OMEGADOT: -700 (2^-38)        -2.5465851649642e-009
af1     : 0 (2^-38)           0
af0     : 19 (2^-20)          1.81198120117188e-005
```

```
1
2   ************SATELLITE: 24***************
3   PRN ID  : 24
4   delta_i : 6865 (2^-19)        0.0130939483642578
5   M_0     : -1059000 (2^-23)    -0.126242637634277
6   e       : 19382 (2^-21)       0.00924205780029297
7   SQRT(A) : 10554441 (2^-11)    5153.53564453125
8   OMEGA_0 : 361690 (2^-23)      0.0431168079376221
9   omega   : -4354610 (2^-23)    -0.519109964370728
10  OMEGADOT: -671 (2^-38)        -2.44108377955854e-009
11  af1     : 1 (2^-38)           3.63797880709171e-012
12  af0     : 78 (2^-20)          7.43865966796875e-005
13
14  ************SATELLITE: 25***************
15  PRN ID  : 25
16  delta_i : -695 (2^-19)        -0.00132560729980469
17  M_0     : 1146872 (2^-23)     0.136717796325684
18  e       : 18977 (2^-21)       0.0090489387512207
19  SQRT(A) : 10554791 (2^-11)    5153.70654296875
20  OMEGA_0 : -8310991 (2^-23)    -0.990747332572937
21  omega   : -5198429 (2^-23)    -0.619701027870178
22  OMEGADOT: -691 (2^-38)        -2.51384335570037e-009
23  af1     : 0 (2^-38)           0
24  af0     : 17 (2^-20)          1.62124633789063e-005
25
26  ************SATELLITE: 27***************
27  PRN ID  : 27
28  delta_i : 57 (2^-19)          0.000108718872070313
29  M_0     : -2921613 (2^-23)    -0.348283410072327
30  e       : 31945 (2^-21)       0.0152325630187988
31  SQRT(A) : 10554622 (2^-11)    5153.6240234375
32  OMEGA_0 : -8248422 (2^-23)    -0.983288526535034
33  omega   : -6816704 (2^-23)    -0.812614440917969
34  OMEGADOT: -684 (2^-38)        -2.48837750405073e-009
35  af1     : 0 (2^-38)           0
36  af0     : 32 (2^-20)          3.0517578125e-005
37
38  ************SATELLITE: 28***************
39  PRN ID  : 28
40  delta_i : 2801 (2^-19)        0.00534248352050781
41  M_0     : -6238231 (2^-23)    -0.74365508556366
42  e       : 11107 (2^-21)       0.00529623031616211
43  SQRT(A) : 10557146 (2^-11)    5154.8564453125
44  OMEGA_0 : -5340170 (2^-23)    -0.636597871780396
45  omega   : -6362118 (2^-23)    -0.758423566818237
46  OMEGADOT: -700 (2^-38)        -2.5465851649642e-009
```

```
af1     : -1 (2^-38)          -3.63797880709171e-012
af0     : -14 (2^-20)         -1.33514404296875e-005

************SATELLITE: 29***************
PRN ID  : 29
delta_i : 3799 (2^-19)        0.00724601745605469
M_0     : 3743957 (2^-23)     0.446314454078674
e       : 17505 (2^-21)       0.0083470344543457
SQRT(A) : 10555169 (2^-11)    5153.89111328125
OMEGA_0 : 5779333 (2^-23)     0.688950181007385
omega   : -4958129 (2^-23)    -0.591055035591125
OMEGADOT: -680 (2^-38)        -2.47382558882236e-009
af1     : 1 (2^-38)           3.63797880709171e-012
af0     : 658 (2^-20)         0.000627517700195313

************SATELLITE: 30***************
PRN ID  : 30
delta_i : 47 (2^-19)          8.96453857421875e-005
M_0     : -7232067 (2^-23)    -0.86212956905365
e       : 11969 (2^-21)       0.0057072639465332
SQRT(A) : 10554571 (2^-11)    5153.59912109375
OMEGA_0 : -5402649 (2^-23)    -0.644045948982239
omega   : 3629757 (2^-23)     0.432700753211975
OMEGADOT: -718 (2^-38)        -2.61206878349185e-009
af1     : 0 (2^-38)           0
af0     : -33 (2^-20)         -3.14712524414063e-005

************SATELLITE: 31***************
PRN ID  : 31
delta_i : 345 (2^-19)         0.000658035278320313
M_0     : 2099959 (2^-23)     0.250334620475769
e       : 21410 (2^-21)       0.0102090835571289
SQRT(A) : 10554724 (2^-11)    5153.673828125
OMEGA_0 : -2626009 (2^-23)    -0.313044667243958
omega   : 2315984 (2^-23)     0.276086807250977
OMEGADOT: -711 (2^-38)        -2.58660293184221e-009
af1     : 1 (2^-38)           3.63797880709171e-012
af0     : 62 (2^-20)          5.91278076171875e-005
```

B.5 List of Active Satellites

Assistance shall be provided in all tests for the satellites having the following PRN numbers:

3, 14, 15, 17, 18, 21, 23, 29, 31

Satellites identified with the following PRN numbers shall be simulated in the tests:

1. GPS Accuracy, GPS Dynamic Range, GPS Moving Scenario and GPS Protocol Tests:

   3, 14, 15, 17, 18, 21, 29, 31

2. GPS Sensitivity Test:

   14, 17, 21, 31

3. GPS Multipath Accuracy Test:

   14, 17, 18, 21, 31

4. One Base Station + Three Satellites Hybrid Test:

   14, 17, 31

5. Two Base Stations + One Satellite Hybrid Test:

   3

B.6 Simulated Base Station Locations

For all tests defined in this document, the simulated base station locations shall be as follows:

1. Base Station 1:
   - Lat: + 37° 00' 00.0000"
   - Lon: - 122° 00' 00.0000"
   - Height: + 150.00 m (above the WGS-84 Reference Ellipsoid)
2. Base Station 2:
   - Lat: + 36° 57' 39.5249"
   - Lon: - 121° 58' 18.9429"
   - Height: + 150.00 m (above the WGS-84 Reference Ellipsoid)
3. Base Station 3:
   - Lat: + 36° 57' 39.5249"
   - Lon: - 122° 01' 41.0571"
   - Height: + 150.00 m (above the WGS-84 Reference Ellipsoid)

B.7 Simulated Mobile Station Locations

The simulated mobile station locations shall be as follows:

1. GPS Accuracy, GPS Sensitivity, GPS Dynamic Range and GPS Multipath Tests:
   - Lat: + 36° 58' 26.3580"
   - Lon: - 122° 00' 00.0000"
   - Height: + 115.00 m (above the WGS-84 Reference Ellipsoid)
2. GPS Moving Scenario Test:

The mobile station's trajectory is a circle in the horizontal plane, with a radius of 1 km, centered at the following location:

- Lat: + 37° 00' 00.0000"
- Lon: - 122° 00' 00.0000"
- Height: + 115.00 m (above the WGS-84 Reference Ellipsoid)

The mobile station's initial position at reference time (see B.2) shall be set as follows:

- Lat: + 36° 59' 27.5618"
- Lon: - 122° 00' 00.0000"
- Height: + 115.00 m (above the WGS-84 Reference Ellipsoid)

The mobile station's velocity is constant at 100 km/h, with an initial heading of -90° at reference time (see B.2).

3. GPS Protocol, all AFLT and Hybrid Tests:

- Lat: + 36° 58' 26.3580"
- Lon: - 122° 00' 00.0000"
- Height: + 115.00 m (above the WGS-84 Reference Ellipsoid)

B.8 Additional GPS Simulator Settings

The settings shown in Table B.8-1 are also applied in the GPS simulator set-up. Note that the IODE and IODC values shown in Table B.8-1 are not mandatory. Any IODE or IODC value can be used, as long as the PDE simulator response messages (see Annex E) are kept consistent with the settings of the GPS simulator.

Table B.8-1 GPS Simulator Settings

SV	IODC	IODE	URA	T_{GD} (ns)	A/S Flag	Alert Flag	SV Health in Frame 25	SV Health in Valid Almanac Pages	SV Conf.
1	-	-	-	-	-	-	'000000'	'00000000'	'0001'
2	-	-	-	-	-	-	'000000'	'00000000'	'0001'
3	2	2	0	-4.656612873	'0'	'0'	'000000'	'00000000'	'0001'
4	-	-	-	-	-	-	'000000'	'00000000'	'0001'
5	-	-	-	-	-	-	'000000'	'00000000'	'0001'
6	-	-	-	-	-	-	'000000'	'00000000'	'0001'
7	-	-	-	-	-	-	'000000'	'00000000'	'0001'
8	-	-	-	-	-	-	'000000'	'00000000'	'0001'
9	-	-	-	-	-	-	'000000'	'00000000'	'0001'
10	-	-	-	-	-	-	'000000'	'00000000'	'0001'
11	-	-	-	-	-	-	'000000'	'00000000'	'0001'
12	-	-	-	-	-	-	'111111'	-	'0001'
13	-	-	-	-	-	-	'000000'	'00000000'	'0001'
14	2	2	2	-10.24454832	'0'	'0'	'000000'	'00000000'	'0001'
15	2	2	1	-2.793967724	'0'	'0'	'000000'	'00000000'	'0001'
16	-	-	-	-	-	-	'111111'	-	'0001'
17	2	2	0	-2.328306437	'0'	'0'	'000000'	'00000000'	'0001'
18	2	2	2	-10.24454832	'0'	'0'	'000000'	'00000000'	'0001'
19	-	-	-	-	-	-	'111111'	-	'0001'
20	-	-	-	-	-	-	'000000'	'00000000'	'0001'
21	2	2	2	-2.328306437	'0'	'0'	'000000'	'00000000'	'0001'
22	-	-	-	-	-	-	'111111'	-	'0001'
23	2	2	0	-2.793967724	'0'	'0'	'000000'	'00000000'	'0001'
24	-	-	-	-	-	-	'000000'	'00000000'	'0001'
25	-	-	-	-	-	-	'000000'	'00000000'	'0001'
26	-	-	-	-	-	-	'111111'	-	'0001'
27	-	-	-	-	-	-	'000000'	'00000000'	'0001'
28	-	-	-	-	-	-	'000000'	'00000000'	'0001'
29	2	2	0	-	'0'	'0'	'000000'	'00000000'	'0001'
30	-	-	-	-6.984919309	-	-	'000000'	'00000000'	'0001'

31	2	2	1	-6.053596735	'0'	'0'	'000000'	'00000000'	'0001'
32	-	-	-	-	-	-	'111111'	-	'0001'

Notes for Table B.8-1:

1. The interpretation of URA is as follows:

   0 : >2 m

   1 : >2.8 m

   2 : >4 m

2. The interpretation of SV Health in Frame 25 is as follows:

   '000000': All Signals OK

   '111111': Satellite not present

3. The interpretation of SV Health in valid Almanac frames is as follows:

   '00000000': All Data and Signals OK

4. The interpretation of Satellite Configuration is as follows:

   '0001': Block 2 satellite

This page intentionally left blank.

Annex C – REFERENCE GNSS NAVIGATION DATA, SYSTEM TIME AND USER LOCATION

This Annex is normative.

C.1 Reference Location

For all GNSS tests defined in this document, the PDE simulator response messages shall be consistent with (i.e. all assistance data shall be valid at) the following reference location:

- Lat: + 37° 22' 00.0000"
- Lon: - 121° 59' 00.0000"
- Height: + 100.00 m (above the WGS-84 Reference Ellipsoid)

C.2 Reference Time

For all GNSS tests defined in this document, the reference time (start time of the test) shall be as follows:

- GPS Time: Week 1557 (WIN:0533), TOW: 225015 (Tuesday, 14:30:15)
- Local Time (Pacific Standard Time): 2009 November 10, 06:30:00 am
- Local Time (Pacific Daylight Time): 2009 November 10, 07:30:00 am
- Delta between GPS and GLONASS time $\Delta T_{GPS-GLONASS}$: tau_gps – 3 hours + 15 seconds
- Delta between GPS and Galileo time $\Delta T_{GPS-Galileo}$: Not specified
- Delta between GPS and QZSS time $\Delta T_{GPS-QZSS}$: Not specified
- Delta between GPS and SBAS time $\Delta T_{GPS-SBAS}$: Not specified

The test equipment shall support a test duration of 15 minutes. The test equipment shall restart from the reference time every 15 minutes if the overall test duration runs over.

C.3 Reference GPS Ephemeris

For all GNSS tests defined in this document, the following GPS reference Ephemeris data shall be used. Note that the first number after the parameter name is the binary value of the corresponding message field defined in [1]; the second number (in parentheses) is the scaling factor expressed in powers of two; and the third number is the floating-point representation. For the applicable units, see [17]. Note that the IODE values shown below are not mandatory. Any IODE value can be used, as long as the PDE simulator response messages are kept consistent with the settings of the GPS simulator.

```
alpha0  : 13 (2^-30)          1.2107193470e-008
alpha1  : -1 (2^-27)          7.4505805969e-009
alpha2  : -2 (2^-24)          -1.1920928955e-007
alpha3  : 1 (2^-24)           5.9604644775e-008
```

```
beta0   : 47 (2^11)            9.6256000000e+004
beta1   : -2 (2^14)            -3.2768000000e+004
beta2   : -3 (2^16)            -1.9660800000e+005
beta3   : 3 (2^16)             1.9660800000e+005

      ********************Satellite: 5********************
           ID  :              5
       PRN ID  :              5
         IODE  :             72
          Crs  :             61  (2^-5)       1.9062500000E+00
      delta_n  :          13461  (2^-43)      1.5303349440E-09
          M_0  :    -2012012972  (2^-31)     -9.3691435972E-01
          Cuc  :             31  (2^-29)      5.7741999626E-08
            e  :       13994345  (2^-33)      1.6291582632E-03
          Cus  :           3244  (2^-29)      6.0424208641E-06
      SQRT(A)  :     2701964785  (2^-19)      5.1535888386E+03
          toe  :          14400  (2^4)                  230400
          Cic  :             20   (2^-29)     3.7252902985E-08
      OMEGA_0  :    -1613720449  (2^-31)     -7.5144538442E-01
          Cis  :              5  (2^-29)      9.3132257462E-09
           i0  :      656908518   (2^-31)     3.0590588808E-01
          Crc  :           8469   (2^-5)      2.6465625000E+02
        omega  :      159748882   (2^-31)     7.4388696085E-02
     OMEGADOT  :         -23281  (2^-43)     -2.6467370798E-09
         IDOT  :           -916  (2^-43)     -1.0414021471E-10
          toc  :          14400  (2^4)                  230400
          af2  :              0  (2^-55)                     0
          af1  :             62  (2^-43)      7.0485839387E-12
          af0  :        -101259  (2^-31)     -4.7152396291E-05


      ********************Satellite: 7********************
           ID  :              7
       PRN ID  :              7
         IODE  :             68
          Crs  :           1100  (2^-5)       3.4375000000E+01
      delta_n  :          12365  (2^-43)      1.4057344612E-09
          M_0  :      144216572  (2^-31)      6.7155917529E-02
          Cuc  :            974  (2^-29)      1.8142163754E-06
            e  :       27922392  (2^-33)      3.2505984135E-03
          Cus  :           3238  (2^-29)      6.0312449932E-06
      SQRT(A)  :     2701993152  (2^-19)      5.1536429443E+03
          toe  :          14400  (2^4)                  230400
          Cic  :             48   (2^-29)     8.9406967163E-08
      OMEGA_0  :     -178519456  (2^-31)     -8.3129405297E-02
          Cis  :            -17  (2^-29)     -3.1664967537E-08
           i0  :      662864081   (2^-31)     3.0867924501E-01
```

```
     Crc  :            8560   (2^-5)      2.6750000000E+02
   omega  :      2067689887   (2^-31)     9.6284088299E-01
OMEGADOT  :          -23097  (2^-43)     -2.6258187505E-09
    IDOT  :            1041  (2^-43)      1.1835148856E-10
     toc  :           14400  (2^4)                  230400
     af2  :               0  (2^-55)                  0
     af1  :              -6  (2^-43)     -6.8212102633E-13
     af0  :           17114  (2^-31)      7.9693272710E-06


********************Satellite: 10********************
      ID  :              10
  PRN ID  :              10
    IODE  :              90
     Crs  :             -81  (2^-5)      -2.5312500000E+00
 delta_n  :           13563  (2^-43)      1.5419309743E-09
     M_0  :      2125332596  (2^-31)      9.8968279829E-01
     Cuc  :            -114  (2^-29)     -2.1234154701E-07
       e  :        74940556  (2^-33)      8.7242401166E-03
     Cus  :            3288  (2^-29)      6.1243772507E-06
 SQRT(A)  :      2701863375  (2^-19)      5.1533954144E+03
     toe  :           14400  (2^4)                  230400
     Cic  :               4   (2^-29)     7.4505805969E-09
 OMEGA_0  :     -1595350838  (2^-31)     -7.4289138773E-01
     Cis  :             -44  (2^-29)     -8.1956386566E-08
      i0  :       653527418   (2^-31)     3.0433139427E-01
     Crc  :            8304   (2^-5)      2.5950000000E+02
   omega  :       424078013   (2^-31)     1.9747625167E-01
OMEGADOT  :          -23065  (2^-43)     -2.6221807802E-09
    IDOT  :            -951  (2^-43)     -1.0811937139E-10
     toc  :           14400  (2^4)                  230400
     af2  :               0  (2^-55)                  0
     af1  :              -8  (2^-43)     -9.0949470177E-13
     af0  :          -60034  (2^-31)     -2.7955509722E-05

********************Satellite: 11********************
      ID  :              11
  PRN ID  :              11
    IODE  :              89
     Crs  :            1771  (2^-5)       5.5343750000E+01
 delta_n  :           18149  (2^-43)      2.0632975929E-09
     M_0  :        70699148  (2^-31)      3.2921779284E-02
     Cuc  :            1620  (2^-29)      3.0174851418E-06
       e  :        87605285  (2^-33)      1.0198610507E-02
     Cus  :            4266  (2^-29)      7.9460442066E-06
 SQRT(A)  :      2702026027  (2^-19)      5.1537056484E+03
     toe  :           14400  (2^4)                  230400
     Cic  :              16   (2^-29)     2.9802322388E-08
```

```
    OMEGA_0  :      1815566681  (2^-31)      8.4543714085E-01
        Cis  :              99  (2^-29)      1.8440186977E-07
         i0  :       607775250   (2^-31)     2.8302575246E-01
        Crc  :            5928   (2^-5)      1.8525000000E+02
      omega  :       515762294   (2^-31)     2.4016997215E-01
    OMEGADOT  :          -25634  (2^-43)     -2.9142415834E-09
       IDOT  :             401  (2^-43)      4.5589766484E-11
        toc  :           14400  (2^4)                 230400
        af2  :               0  (2^-55)                 0
        af1  :             -17  (2^-43)     -1.9326762413E-12
        af0  :          -61211  (2^-31)     -2.8503593057E-05

    ********************Satellite: 13********************
         ID  :              13
     PRN ID  :              13
       IODE  :              81
        Crs  :             670  (2^-5)       2.0937500000E+01
    delta_n  :            9714  (2^-43)      1.1043513592E-09
        M_0  :      1767047356  (2^-31)      8.2284362236E-01
        Cuc  :             612  (2^-29)      1.1399388313E-06
          e  :        33777409  (2^-33)      3.9322129747E-03
        Cus  :            5553  (2^-29)      1.0343268514E-05
    SQRT(A)  :      2701987852  (2^-19)      5.1536328354E+03
        toe  :           14400  (2^4)                 230400
        Cic  :              13   (2^-29)     2.4214386940E-08
    OMEGA_0  :      -852274658  (2^-31)     -3.9687038633E-01
        Cis  :              29  (2^-29)      5.4016709328E-08
         i0  :       679436465   (2^-31)     3.1639659028E-01
        Crc  :            6256   (2^-5)      1.9550000000E+02
      omega  :      1133220653   (2^-31)     5.2769575411E-01
    OMEGADOT  :          -21110  (2^-43)     -2.3999235322E-09
       IDOT  :             -262  (2^-43)     -2.9786829973E-11
        toc  :           14400  (2^4)                 230400
        af2  :               0  (2^-55)                 0
        af1  :               1  (2^-43)      1.1368683772E-13
        af0  :          657473  (2^-31)      3.0615972355E-04

    ********************Satellite: 15********************
         ID  :              15
     PRN ID  :              15
       IODE  :              56
        Crs  :             -77  (2^-5)      -2.4062500000E+00
    delta_n  :           12301  (2^-43)      1.3984585206E-09
        M_0  :      1867052234  (2^-31)      8.6941191371E-01
        Cuc  :             -45  (2^-29)     -8.3819031715E-08
          e  :        16963670  (2^-33)      1.9748336313E-03
        Cus  :            5423  (2^-29)      1.0101124644E-05
    SQRT(A)  :      2702018849  (2^-19)      5.1536919575E+03
```

```
          toe  :           14400  (2^4)                 230400
          Cic  :               4   (2^-29)     7.4505805969E-09
      OMEGA_0  :      -905821450  (2^-31)     -4.2180499612E-01
          Cis  :              -4  (2^-29)     -7.4505805969E-09
           i0  :       652916048   (2^-31)     3.0404669453E-01
          Crc  :            5788   (2^-5)      1.8087500000E+02
        omega  :      -330720647   (2^-31)    -1.5400344209E-01
      OMEGADOT  :          -22624  (2^-43)     -2.5720450021E-09
          IDOT  :           -473  (2^-43)     -5.3775460216E-11
          toc  :           14400  (2^4)                 230400
          af2  :               0  (2^-55)                   0
          af1  :               3  (2^-43)      3.4106051316E-13
          af0  :         -687680  (2^-31)     -3.2022595406E-04

     ********************Satellite: 17********************
        ID     :              17
     PRN ID    :              17
       IODE    :              46
        Crs    :           -1146  (2^-5)              -35.8125
    delta_n    :           12573  (2^-43)           1.42938E-09
        M_0    :      2066715891  (2^-31)           0.962387332
        Cuc    :            -977  (2^-29)           -1.8198E-06
          e    :        40964640  (2^-33)           0.004768918
        Cus    :            6486  (2^-29)           1.20811E-05
    SQRT(A)    :      2702052523  (2^-19)           5153.756186
        toe    :           14400  (2^4)                 230400
        Cic    :             -24  (2^-29)          -4.47035E-08
    OMEGA_0    :      1265695521  (2^-31)           0.589384027
        Cis    :             -26  (2^-29)          -4.84288E-08
         i0    :       655954423  (2^-31)            0.30546159
        Crc    :            4612   (2^-5)              144.125
      omega    :     -1811603965  (2^-31)          -0.843591862
    OMEGADOT   :          -22045  (2^-43)          -2.50622E-09
        IDOT   :              26  (2^-43)           2.95594E-12
        toc    :           14400  (2^4)                 230400
        af2    :               0  (2^-55)                   0
        af1    :              31  (2^-43)           3.52429E-12
        af0    :          217023  (2^-31)           0.000101059
```

C.4 Reference GPS Almanac

For all GNSS tests defined in this document, the following reference GPS Almanac data shall be used. Note that the first number after the parameter name is the binary value of

the corresponding message field defined in [1]; the second number (in parentheses) is the scaling factor expressed in powers of two; and the third number is the floating-point representation. For the applicable units, see [17].

```
WIN=533
toa : 99 (2^12)                    405504


          ************SATELLITE: 2***************
 PRN ID     :            2
 delta_i    :         -257  (2^-19)     -4.9088898014E-04
 M_0        :      6253756  (2^-23)      7.4550406646E-01
 e          :        19195  (2^-21)      9.1528892517E-03
 SQRT(A)    :     10554748  (2^-11)      5.1536855469E+03
 OMEGA_0    :      7644804  (2^-23)      9.1132952250E-01
 omega      :      7780607  (2^-23)      9.2751846381E-01
 OMEGADOT:  :         -697  (2^-38)     -2.5356652991E-09
 af1        :            1  (2^-38)      3.6379788071E-12
 af0        :          200  (2^-20)      1.9073486328E-04


          ************SATELLITE: 3***************
 PRN ID     :            3
 delta_i    :        -2707  (2^-19)     -5.1638822033E-03
 M_0        :      5593956  (2^-23)      6.6684996117E-01
 e          :        26583  (2^-21)      1.2675762177E-02
 SQRT(A)    :     10554584  (2^-11)      5.1536054688E+03
 OMEGA_0    :      4574562  (2^-23)      5.4532901082E-01
 omega      :      2575152  (2^-23)      3.0698132255E-01
 OMEGADOT:  :         -725  (2^-38)     -2.6375284674E-09
 af1        :            1  (2^-38)      3.6379788071E-12
 af0        :          497  (2^-20)      4.7397613525E-04

          ************SATELLITE: 4***************
 PRN ID     :            4
 delta_i    :         -392  (2^-19)     -7.4838044309E-04
 M_0        :     -2872369  (2^-23)     -3.4241226709E-01
 e          :        18939  (2^-21)      9.0308189392E-03
 SQRT(A)    :     10554415  (2^-11)      5.1535229492E+03
 OMEGA_0    :      7693245  (2^-23)      9.1710412621E-01
 omega      :      1480014  (2^-23)      1.7643100489E-01
 OMEGADOT:  :         -700  (2^-38)     -2.5465792100E-09
 af1        :           -5  (2^-38)     -1.8189894035E-11
 af0        :         -373  (2^-20)     -3.5572052002E-04

          ************SATELLITE: 5***************
 PRN ID     :            5
```

```
delta_i    :          3090  (2^-19)      5.8929919659E-03
M_0        :      -6764272  (2^-23)     -8.0636217383E-01
e          :          3448  (2^-21)      1.6441345215E-03
SQRT(A)    :      10554447  (2^-11)      5.1535385742E+03
OMEGA_0    :      -6307557  (2^-23)     -7.5191763047E-01
omega      :        620801  (2^-23)      7.4005073106E-02
OMEGADOT:  :          -723  (2^-38)     -2.6302525269E-09
af1        :             1  (2^-38)      3.6379788071E-12
af0        :           -48  (2^-20)     -4.5776367188E-05

         ************SATELLITE: 6***************
PRN ID     :             6
delta_i    :         -1466  (2^-19)     -2.7968680863E-03
M_0        :      -5039317  (2^-23)     -6.0073199462E-01
e          :         12100  (2^-21)      5.7697296143E-03
SQRT(A)    :      10554652  (2^-11)      5.1536386719E+03
OMEGA_0    :       4758858  (2^-23)      5.6729875465E-01
omega      :      -3227930  (2^-23)     -3.8479834218E-01
OMEGADOT:  :          -716  (2^-38)     -2.6047867348E-09
af1        :             0  (2^-38)      0.0000000000E+00
af0        :           273  (2^-20)      2.6035308838E-04

         ************SATELLITE: 7***************
PRN ID     :             7
delta_i    :          4555  (2^-19)      8.6872511777E-03
M_0        :       1642847  (2^-23)      1.9584216575E-01
e          :          6828  (2^-21)      3.2558441162E-03
SQRT(A)    :      10554571  (2^-11)      5.1535991211E+03
OMEGA_0    :       -701053  (2^-23)     -8.3571834642E-02
omega      :       8086906  (2^-23)      9.6403206458E-01
OMEGADOT:  :          -677  (2^-38)     -2.4629058930E-09
af1        :             0  (2^-38)      0.0000000000E+00
af0        :             8  (2^-20)      7.6293945313E-06

         ************SATELLITE: 9***************
PRN ID     :             9
delta_i    :          6032  (2^-19)      1.1504398520E-02
M_0        :       -567815  (2^-23)     -6.7688664461E-02
e          :         43195  (2^-21)      2.0596981049E-02
SQRT(A)    :      10554535  (2^-11)      5.1535815430E+03
OMEGA_0    :       -788585  (2^-23)     -9.4006437774E-02
omega      :       4057794  (2^-23)      4.8372560873E-01
OMEGADOT:  :          -670  (2^-38)     -2.4374401010E-09
af1        :             1  (2^-38)      3.6379788071E-12
af0        :            92  (2^-20)      8.7738037109E-05

         ************SATELLITE: 10**************
PRN ID     :            10
```

```
delta_i    :          2265  (2^-19)      4.3194330214E-03
M_0        :      -7374504  (2^-23)     -8.7910732690E-01
e          :         18322  (2^-21)      8.7366104126E-03
SQRT(A)    :      10554046  (2^-11)      5.1533427734E+03
OMEGA_0    :      -6235830  (2^-23)     -7.4336712573E-01
omega      :       1655629  (2^-23)      1.9736589532E-01
OMEGADOT:  :          -729  (2^-38)     -2.6520803486E-09
af1        :             0  (2^-38)      0.0000000000E+00
af0        :           -29  (2^-20)     -2.7656555176E-05

        ************SATELLITE: 11***************
PRN ID     :            11
delta_i    :         -8903  (2^-19)     -1.6981786698E-02
M_0        :       1360966  (2^-23)      1.6223941058E-01
e          :         21419  (2^-21)      1.0213375092E-02
SQRT(A)    :      10554667  (2^-11)      5.1536459961E+03
OMEGA_0    :       7087952  (2^-23)      8.4494774643E-01
omega      :       2017609  (2^-23)      2.4051717305E-01
OMEGADOT:  :          -736  (2^-38)     -2.6775461408E-09
af1        :            -1  (2^-38)     -3.6379788071E-12
af0        :           -30  (2^-20)     -2.8610229492E-05

        ************SATELLITE: 12***************
PRN ID     :            12  (2^-19)
delta_i    :          4355  (2^-23)      8.3057823434E-03
M_0        :       1998629  (2^-21)      2.3825458602E-01
e          :          6448  (2^-11)      3.0746459961E-03
SQRT(A)    :      10554310  (2^-23)      5.1534716797E+03
OMEGA_0    :       2109267  (2^-23)      2.5144363256E-01
omega      :      -1535165  (2^-38)     -1.8300550105E-01
OMEGADOT:  :          -704  (2^-38)     -2.5611310912E-09
af1        :             1  (2^-20)      3.6379788071E-12
af0        :          -200              -1.9073486328E-04

        ************SATELLITE: 13***************
PRN ID     :            13
delta_i    :          8582  (2^-19)      1.6368126162E-02
M_0        :       7995019  (2^-23)      9.5307830621E-01
e          :          8257  (2^-21)      3.9372444153E-03
SQRT(A)    :      10554547  (2^-11)      5.1535874023E+03
OMEGA_0    :      -3332827  (2^-23)     -3.9730300980E-01
omega      :       4424022  (2^-23)      5.2738328632E-01
OMEGADOT:  :          -670  (2^-38)     -2.4374401010E-09
af1        :             0  (2^-38)      0.0000000000E+00
af0        :           321  (2^-20)      3.0612945557E-04

        ************SATELLITE: 14***************
PRN ID     :            14
```

```
delta_i    :          7479  (2^-19)      1.4264325538E-02
M_0        :       7794041  (2^-23)      9.2911991765E-01
e          :         10654  (2^-21)      5.0802230835E-03
SQRT(A)    :      10554631  (2^-11)      5.1536284180E+03
OMEGA_0    :      -3387764  (2^-23)     -4.0385199523E-01
omega      :      -5661540  (2^-23)     -6.7490658295E-01
OMEGADOT:  :          -677  (2^-38)     -2.4629058930E-09
af1        :             1  (2^-38)      3.6379788071E-12
af0        :           -27  (2^-20)     -2.5749206543E-05

        ************SATELLITE: 15***************
PRN ID     :            15
delta_i    :          2107  (2^-19)      4.0180726413E-03
M_0        :       8369874  (2^-23)      9.9776439996E-01
e          :          4161  (2^-21)      1.9841194153E-03
SQRT(A)    :      10554643  (2^-11)      5.1536342773E+03
OMEGA_0    :      -3542222  (2^-23)     -4.2226478062E-01
omega      :      -1280539  (2^-23)     -1.5265178746E-01
OMEGADOT:  :          -710  (2^-38)     -2.5829589129E-09
af1        :             0  (2^-38)      0.0000000000E+00
af0        :          -336  (2^-20)     -3.2043457031E-04

        ************SATELLITE: 16***************
PRN ID     :            16
delta_i    :          4577  (2^-19)      8.7292127483E-03
M_0        :      -4520791  (2^-23)     -5.3891902308E-01
e          :         11199  (2^-21)      5.3400993347E-03
SQRT(A)    :      10554565  (2^-11)      5.1535961914E+03
OMEGA_0    :       2155148  (2^-23)      2.5691306118E-01
omega      :       -715592  (2^-23)     -8.5305014448E-02
OMEGADOT:  :          -704  (2^-38)     -2.5611310912E-09
af1        :            -1  (2^-38)     -3.6379788071E-12
af0        :            -8  (2^-20)     -7.6293945313E-06

        ************SATELLITE: 17***************
PRN ID     :            17
delta_i    :          2847  (2^-19)      5.4295073307E-03
M_0        :      -7621124  (2^-23)     -9.0850665314E-01
e          :         10013  (2^-21)      4.7745704651E-03
SQRT(A)    :      10554780  (2^-11)      5.1537011719E+03
OMEGA_0    :       4940363  (2^-23)      5.8893578616E-01
omega      :      -7074208  (2^-23)     -8.4330933779E-01
OMEGADOT:  :          -688  (2^-38)     -2.5029235664E-09
af1        :             1  (2^-38)      3.6379788071E-12
af0        :           107  (2^-20)      1.0204315186E-04

        ************SATELLITE: 18***************
PRN ID     :            18
```

```
delta_i    :          -403  (2^-19)      -7.6936122995E-04
M_0        :      -3997741  (2^-23)      -4.7656675000E-01
e          :         22882  (2^-21)       1.0910987854E-02
SQRT(A)    :      10554540  (2^-11)       5.1535839844E+03
OMEGA_0    :      -6228156  (2^-23)      -7.4245231579E-01
omega      :      -6303165  (2^-23)      -7.5139406449E-01
OMEGADOT:  :          -740  (2^-38)      -2.6920980220E-09
af1        :             1  (2^-38)       3.6379788071E-12
af0        :            28  (2^-20)       2.6702880859E-05

        ************SATELLITE: 19***************
PRN ID     :            19
delta_i    :          2465  (2^-19)       4.7009018557E-03
M_0        :       7350121  (2^-23)       8.7620065358E-01
e          :         12377  (2^-21)       5.9018135071E-03
SQRT(A)    :      10554611  (2^-11)       5.1536186523E+03
OMEGA_0    :       5088797  (2^-23)       6.0663045649E-01
omega      :       -543226  (2^-23)      -6.4757434094E-02
OMEGADOT:  :          -691  (2^-38)      -2.5138374772E-09
af1        :            -1  (2^-38)      -3.6379788071E-12
af0        :             2  (2^-20)       1.9073486328E-06

        ************SATELLITE: 20***************
PRN ID     :            20
delta_i    :          -438  (2^-19)      -8.3611827731E-04
M_0        :      -3523119  (2^-23)      -4.1998753088E-01
e          :          8326  (2^-21)       3.9701461792E-03
SQRT(A)    :      10554735  (2^-11)       5.1536791992E+03
OMEGA_0    :      -6372071  (2^-23)      -7.5960828059E-01
omega      :       3450636  (2^-23)       4.1134690416E-01
OMEGADOT:  :          -742  (2^-38)      -2.6993739626E-09
af1        :             0  (2^-38)       0.0000000000E+00
af0        :            71  (2^-20)       6.7710876465E-05

        ************SATELLITE: 21***************
PRN ID     :            21
delta_i    :         -1469  (2^-19)      -2.8025901197E-03
M_0        :       -808623  (2^-23)      -9.6395147931E-02
e          :         32837  (2^-21)       1.5657901764E-02
SQRT(A)    :      10554752  (2^-11)       5.1536875000E+03
OMEGA_0    :       7725381  (2^-23)       9.2093502696E-01
omega      :      -6801766  (2^-23)      -8.1083179647E-01
OMEGADOT:  :          -707  (2^-38)      -2.5720450021E-09
af1        :            -1  (2^-38)      -3.6379788071E-12
af0        :           -22  (2^-20)      -2.0980834961E-05

        ************SATELLITE: 22***************
PRN ID     :            22
```

```
delta_i    :          -791  (2^-19)      -1.5094107684E-03
M_0        :      -6747347  (2^-23)      -8.0434456131E-01
e          :         11074  (2^-21)       5.2804946899E-03
SQRT(A)    :      10554576  (2^-11)       5.1536015625E+03
OMEGA_0    :      -6213925  (2^-23)      -7.4075585237E-01
omega      :      -5008424  (2^-23)      -5.9704927066E-01
OMEGADOT:  :          -742  (2^-38)      -2.6993739626E-09
af1        :             0  (2^-38)       0.0000000000E+00
af0        :           196  (2^-20)       1.8692016602E-04

        ************SATELLITE: 23***************
PRN ID     :            23
delta_i    :          4459  (2^-19)       8.5041461357E-03
M_0        :       5958822  (2^-23)       7.1034527607E-01
e          :         13336  (2^-21)       6.3591003418E-03
SQRT(A)    :      10554795  (2^-11)       5.1537084961E+03
OMEGA_0    :      -3482540  (2^-23)      -4.1515014843E-01
omega      :       8021444  (2^-23)       9.5622840435E-01
OMEGADOT:  :          -695  (2^-38)      -2.5283893584E-09
af1        :             0  (2^-38)       0.0000000000E+00
af0        :           405  (2^-20)       3.8623809814E-04

        ************SATELLITE: 26***************
PRN ID     :            26
delta_i    :          8214  (2^-19)       1.5666223504E-02
M_0        :        330107  (2^-23)       3.9351728925E-02
e          :         41202  (2^-21)       1.9646644592E-02
SQRT(A)    :      10554519  (2^-11)       5.1535737305E+03
OMEGA_0    :      -3340132  (2^-23)      -3.9817383161E-01
omega      :       2779684  (2^-23)       3.3136337993E-01
OMEGADOT:  :          -671  (2^-38)      -2.4410780713E-09
af1        :            -1  (2^-38)      -3.6379788071E-12
af0        :             4  (2^-20)       3.8146972656E-06

        ************SATELLITE: 27***************
PRN ID     :            27
delta_i    :          5702  (2^-19)       1.0874974943E-02
M_0        :       8030883  (2^-23)       9.5735361819E-01
e          :         45175  (2^-21)       2.1541118622E-02
SQRT(A)    :      10554725  (2^-11)       5.1536743164E+03
OMEGA_0    :       -853724  (2^-23)      -1.0177159353E-01
omega      :      -4062759  (2^-23)      -4.8431748147E-01
OMEGADOT:  :          -666  (2^-38)      -2.4228882198E-09
af1        :             0  (2^-38)       0.0000000000E+00
af0        :           104  (2^-20)       9.9182128906E-05

        ************SATELLITE: 28***************
PRN ID     :            28
```

```
delta_i    :          4278  (2^-19)      8.1589168417E-03
M_0        :      -6077308  (2^-23)     -7.2446987494E-01
e          :         32078  (2^-21)      1.5295982361E-02
SQRT(A)    :      10554566  (2^-11)      5.1535966797E+03
OMEGA_0    :       2176448  (2^-23)      2.5945221311E-01
omega      :      -5368321  (2^-23)     -6.3995223599E-01
OMEGADOT:  :          -704  (2^-38)     -2.5611310912E-09
af1        :             0  (2^-38)      0.0000000000E+00
af0        :           -27  (2^-20)     -2.5749206543E-05

        ************SATELLITE: 29***************
PRN ID     :            29
delta_i    :          2894  (2^-19)      5.5191525051E-03
M_0        :       -555882  (2^-23)     -6.6266143335E-02
e          :          6103  (2^-21)      2.9101371765E-03
SQRT(A)    :      10554413  (2^-11)      5.1535219727E+03
OMEGA_0    :       4962295  (2^-23)      5.9155027820E-01
omega      :      -3385911  (2^-23)     -4.0363110094E-01
OMEGADOT:  :          -688  (2^-38)     -2.5029235664E-09
af1        :             1  (2^-38)      3.6379788071E-12
af0        :            77  (2^-20)      7.3432922363E-05

        ************SATELLITE: 30***************
PRN ID     :            30
delta_i    :          1885  (2^-19)      3.5946422364E-03
M_0        :      -4804584  (2^-23)     -5.7274970588E-01
e          :         25025  (2^-21)      1.1932849884E-02
SQRT(A)    :      10554553  (2^-11)      5.1535903320E+03
OMEGA_0    :       1974491  (2^-23)      2.3537711892E-01
omega      :       3918560  (2^-23)      4.6712766132E-01
OMEGADOT:  :          -715  (2^-38)     -2.6011487645E-09
af1        :             1  (2^-38)      3.6379788071E-12
af0        :           202  (2^-20)      1.9264221191E-04

        ************SATELLITE: 31***************
PRN ID     :            31
delta_i    :          5443  (2^-19)      1.0380972804E-02
M_0        :       1389675  (2^-23)      1.6566178207E-01
e          :         15339  (2^-21)      7.3142051697E-03
SQRT(A)    :      10554392  (2^-11)      5.1535117188E+03
OMEGA_0    :       -704551  (2^-23)     -8.3988827760E-02
omega      :      -3058949  (2^-23)     -3.6465428435E-01
OMEGADOT:  :          -670  (2^-38)     -2.4374401010E-09
af1        :             0  (2^-38)      0.0000000000E+00
af0        :           -64  (2^-20)     -6.1035156250E-05

        ************SATELLITE: 32***************
PRN ID     :            32
```

```
delta_i    :         3218  (2^-19)      6.1371320187E-03
M_0        :      3688126  (2^-23)      4.3965785211E-01
e          :        27721  (2^-21)      1.3218402863E-02
SQRT(A)    :     10554595  (2^-11)      5.1536108398E+03
OMEGA_0    :     -6069976  (2^-23)     -7.2359583448E-01
omega      :     -2886055  (2^-23)     -3.4404376162E-01
OMEGADOT:  :         -721  (2^-38)     -2.6229765863E-09
af1        :           -2  (2^-38)     -7.2759576142E-12
af0        :          167  (2^-20)      1.5926361084E-04
```

C.5 Reference GLONASS Ephemeris

For all GNSS tests defined in this document, the following reference GLONASS Ephemeris data shall be used. Note that the first number after the parameter name is the binary value of the corresponding message field defined in [1]; the second number (in parentheses) is the scaling factor expressed in powers of two; and the third number is the floating-point representation. For the applicable units, see [22].

```
                ************SATELLITE: 7***************
ID         :           7
PRN ID     :           7
H n        :           5
t b        :          71             (15)                          1065
M          :           1
g n        :           3            (2^-40)             2.7284800000E-12
t n        :      -67276            (2^-30)            -6.2655700000E-05
x n        :    -51389421           (2^-11)            -2.5092500000E+04
y n        :     -7366009           (2^-11)            -3.5966800000E+03
z n        :     -5598534           (2^-11)            -2.7336600000E+03
x d n      :       379444           (2^-20)             3.6186600000E-01
y d n      :       149602           (2^-20)             1.4267200000E-01
z d n      :     -3693395           (2^-20)            -3.5223000000E+00
x dd n     :           0            (2^-30)             0.0000000000E+00
y dd n     :          -2            (2^-30)            -1.8626500000E-09
z dd n     :           1            (2^-30)             9.3132300000E-10
B n        :           0
P          :           1
F T        :           4
Dt n       :          -6            (2^-30)            -5.5879400000E-09
E n        :           0
P1         :           0
P2         :           1

                ************SATELLITE: 8***************
ID         :           8
PRN ID     :           8
```

H n	:	6		
t b	:	71	(15)	1065
M	:	1		
g n	:	1	(2^-40)	9.0949500000E-13
t n	:	88919	(2^-30)	8.2812300000E-05
x n	:	-42258441	(2^-11)	-2.0634000000E+04
y n	:	8216378	(2^-11)	4.0119000000E+03
z n	:	29612239	(2^-11)	1.4459100000E+04
x d n	:	-2072783	(2^-20)	-1.9767600000E+00
y d n	:	-157355	(2^-20)	-1.5006500000E-01
z d n	:	-2915777	(2^-20)	-2.7807000000E+00
x dd n	:	0	(2^-30)	0.0000000000E+00
y dd n	:	-1	(2^-30)	-9.3132300000E-10
z dd n	:	0	(2^-30)	0.0000000000E+00
B n	:	0		
P	:	1		
F T	:	3		
Dt n	:	1	(2^-30)	9.3132300000E-10
E n	:	0		
P1	:	0		
P2	:	1		

**********SATELLITE:9*****
**

ID	:	9		
PRN ID	:	9		
H n	:	-2		
t b	:	71	(15)	1065
M	:	1		
g n	:	-2	(2^-40)	-1.8189900000E-12
t n	:	114756	(2^-30)	1.0687500000E-04
x n	:	-3563790	(2^-11)	-1.7401300000E+03
y n	:	-28633935	(2^-11)	-1.3981400000E+04
z n	:	43521842	(2^-11)	2.1250900000E+04
x d n	:	1788895	(2^-20)	1.7060200000E+00
y d n	:	-2479147	(2^-20)	-2.3643000000E+00
z d n	:	-1484295	(2^-20)	-1.4155300000E+00
x dd n	:	-2	(2^-30)	-1.8626500000E-09
y dd n	:	-2	(2^-30)	-1.8626500000E-09
z dd n	:	-2	(2^-30)	-1.8626500000E-09
B n	:	0		
P	:	1		
F T	:	5		
Dt n	:	5	(2^-30)	4.6566100000E-09
E n	:	0		
P1	:	0		
P2	:	1		

```
            ************SATELLITE: 10***************
ID         :          10
PRN ID     :          10
H n        :          -7
t b        :          71              (15)                          1065
M          :           1
g n        :           0              (2^-40)             0.0000000000E+00
t n        :      139895              (2^-30)             1.3028700000E-04
x n        :   -27333742              (2^-11)            -1.3346600000E+04
y n        :     2671064              (2^-11)             1.3042300000E+03
z n        :    44451875              (2^-11)             2.1705000000E+04
x d n      :     1942364              (2^-20)             1.8523800000E+00
y d n      :    -2444304              (2^-20)            -2.3310700000E+00
z d n      :     1331270              (2^-20)             1.2696000000E+00
x dd n     :           0              (2^-30)             0.0000000000E+00
y dd n     :          -1              (2^-30)            -9.3132300000E-10
z dd n     :          -2              (2^-30)            -1.8626500000E-09
B n        :           0
P          :           1
F T        :           4
Dt n       :           9              (2^-30)             8.3819000000E-09
E n        :           0
P1         :           0
P2         :           1

            ************SATELLITE: 18***************
ID         :          18
PRN ID     :          18
H n        :          -3
t b        :          71              (15)                          1065
M          :           1
g n        :           0              (2^-40)             0.0000000000E+00
t n        :       12427              (2^-30)             1.1573500000E-05
x n        :    17307666              (2^-11)             8.4510100000E+03
y n        :   -15661850              (2^-11)            -7.6473900000E+03
z n        :    46750376              (2^-11)             2.2827300000E+04
x d n      :     1248470              (2^-20)             1.1906300000E+00
y d n      :     3027019              (2^-20)             2.8867900000E+00
z d n      :      563838              (2^-20)             5.3771800000E-01
x dd n     :          -1              (2^-30)            -9.3132300000E-10
y dd n     :           0              (2^-30)             0.0000000000E+00
z dd n     :          -3              (2^-30)            -2.7939700000E-09
B n        :           0
P          :           1
F T        :           4
Dt n       :          10              (2^-30)             9.3132300000E-09
E n        :           0
P1         :           0
```

```
P2        :           1

            ************SATELLITE: 19***************
ID        :          19
PRN ID    :          19
H n       :           3
t b       :          71              (15)                          1065
M         :           1
g n       :          -1             (2^-40)             -9.0949500000E-13
t n       :      119461             (2^-30)              1.1125700000E-04
x n       :    -3816100             (2^-11)             -1.8633300000E+03
y n       :   -43839074             (2^-11)             -2.1405800000E+04
z n       :    28144704             (2^-11)              1.3742500000E+04
x d n     :      613128             (2^-20)              5.8472400000E-01
y d n     :     1883580             (2^-20)              1.7963200000E+00
z d n     :     3015204             (2^-20)              2.8755200000E+00
x dd n    :          -2             (2^-30)             -1.8626500000E-09
y dd n    :          -3             (2^-30)             -2.7939700000E-09
z dd n    :          -1             (2^-30)             -9.3132300000E-10
B n       :           0
P         :           1
F T       :           3
Dt n      :           4             (2^-30)              3.7252900000E-09
E n       :           0
P1        :           0
P2        :           1


            ************SATELLITE: 20***************
ID        :          20
PRN ID    :          20
H n       :           2
t b       :          71              (15)                          1065
M         :           1
g n       :           0             (2^-40)              0.0000000000E+00
t n       :       75025             (2^-30)              6.9872500000E-05
x n       :   -22876739             (2^-11)             -1.1170300000E+04
y n       :   -46293328             (2^-11)             -2.2604200000E+04
z n       :    -7452515             (2^-11)             -3.6389200000E+03
x d n     :     -369001             (2^-20)             -3.5190700000E-01
y d n     :     -414094             (2^-20)             -3.9491100000E-01
z d n     :     3710957             (2^-20)              3.5390400000E+00
x dd n    :          -1             (2^-30)             -9.3132300000E-10
y dd n    :          -4             (2^-30)             -3.7252900000E-09
z dd n    :           1             (2^-30)              9.3132300000E-10
B n       :           0
P         :           1
F T       :           4
```

```
Dt n       :            5             (2^-30)              4.6566100000E-09
E n        :            0
P1         :            0
P2         :            1
```

C.6 Reference GLONASS Almanac

For all GNSS tests defined in this document, the following reference Almanac data shall be used. Note that the first number after the parameter name is the binary value of the corresponding message field defined in [1]; the second number (in parentheses) is the scaling factor expressed in powers of two; and the third number is the floating-point representation. For the applicable units, see [2222].

GLONASS-GPS time relationship

```
tau_c          :       -318  (2^-31)          -1.48080E-07
N_4            :          4
tau_gps        :       -453  (2^-30)          -4.21889E-07
B_1            :        165  (2^-10)           1.61133E-01
B_2            :        -95  (2^-16)          -1.44958E-03
KP             :          0
```

GLONASS Almanac

```
          ************SATELLITE: 2***************
ID             :           2
N              :         679
n              :           2
H n            :          -4
Lamda_n        :    -1047942  (2^-20)     -9.9939537048E-01
t lamda_n      :      735023  (2^-5)       2.2969468750E+04
D i n          :        9374  (2^-20)      8.9397430420E-03
D T n          :    -1359827  (2^-9)      -2.6559121094E+03
D T DOTn       :          31  (2^-14)      1.8920898438E-03
e_n            :         444  (2^-20)      4.2343139648E-04
Omaga_n        :       -9013  (2^-15)     -2.7505493164E-01
tau_n          :          28  (2^-18)      1.0681152344E-04
C n            :           1
M n            :           1

          ************SATELLITE: 3***************
ID             :           3
N              :         679
n              :           3
H n            :           5
```

```
Lamda_n      :     926627  (2^-20)     8.8370037079E-01
t lamda_n    :     896277  (2^-5)      2.8008656250E+04
D i n        :       9418  (2^-20)     8.9817047119E-03
D T n        :   -1359835  (2^-9)     -2.6559277344E+03
D T DOTn     :         32  (2^-14)     1.9531250000E-03
e_n          :        319  (2^-20)     3.0422210693E-04
Omaga_n      :     -18600  (2^-15)    -5.6762695313E-01
tau_n        :         15  (2^-18)     5.7220458984E-05
C n          :          1
M n          :          1

        ************SATELLITE: 7***************
ID           :          7
N            :        679
n            :          7
H n          :          5
Lamda_n      :    -691751  (2^-20)    -6.5970516205E-01
t lamda_n    :     244171  (2^-5)      7.6303437500E+03
D i n        :       4461  (2^-20)     4.2543411255E-03
D T n        :   -1359743  (2^-9)     -2.6557480469E+03
D T DOTn     :         33  (2^-14)     2.0141601563E-03
e_n          :        600  (2^-20)     5.7220458984E-04
Omaga_n      :      27083  (2^-15)     8.2650756836E-01
tau_n        :        -16  (2^-18)    -6.1035156250E-05
C n          :          1
M n          :          1

        ************SATELLITE: 8***************
ID           :          8
N            :        679
n            :          8
H n          :          6
Lamda_n      :    -799564  (2^-20)    -7.6252365112E-01
t lamda_n    :     408485  (2^-5)      1.2765156250E+04
D i n        :       9353  (2^-20)     8.9197158813E-03
D T n        :   -1359853  (2^-9)     -2.6559628906E+03
D T DOTn     :         32  (2^-14)     1.9531250000E-03
e_n          :        316  (2^-20)     3.0136108398E-04
Omaga_n      :     -14235  (2^-15)    -4.3441772461E-01
tau_n        :         21  (2^-18)     8.0108642578E-05
C n          :          1
M n          :          1

        ************SATELLITE: 9***************
ID           :          9
N            :        679
n            :          9
H n          :         -2
```

```
Lamda_n      :    -181585  (2^-20)    -1.7317295074E-01
t lamda_n    :     509453  (2^-5)      1.5920406250E+04
D i n        :      12277  (2^-20)     1.1708259583E-02
D T n        :   -1359882  (2^-9)     -2.6560195313E+03
D T DOTn     :         -1  (2^-14)    -6.1035156250E-05
e_n          :        434  (2^-20)     4.1389465332E-04
Omaga_n      :      18284  (2^-15)     5.5798339844E-01
tau_n        :         28  (2^-18)     1.0681152344E-04
C n          :          1
M n          :          1

        ************SATELLITE: 10***************
ID           :         10
N            :        679
n            :         10
H n          :         -7
Lamda_n      :    -304194  (2^-20)    -2.9010200500E-01
t lamda_n    :     667339  (2^-5)      2.0854343750E+04
D i n        :      14582  (2^-20)     1.3906478882E-02
D T n        :   -1359865  (2^-9)     -2.6559863281E+03
D T DOTn     :         -3  (2^-14)    -1.8310546875E-04
e_n          :       2097  (2^-20)     1.9998550415E-03
Omaga_n      :      30040  (2^-15)     9.1674804688E-01
tau_n        :         34  (2^-18)     1.2969970703E-04
C n          :          1
M n          :          1

        ************SATELLITE: 11***************
ID           :         11
N            :        679
n            :         11
H n          :          0
Lamda_n      :    -427284  (2^-20)    -4.0748977661E-01
t lamda_n    :     832469  (2^-5)      2.6014656250E+04
D i n        :      12348  (2^-20)     1.1775970459E-02
D T n        :   -1359880  (2^-9)     -2.6560156250E+03
D T DOTn     :         -3  (2^-14)    -1.8310546875E-04
e_n          :       1731  (2^-20)     1.6508102417E-03
Omaga_n      :        159  (2^-15)     4.8522949219E-03
tau_n        :         29  (2^-18)     1.1062622070E-04
C n          :          1              1.0000000000E+00
M n          :          1              1.0000000000E+00

        ************SATELLITE: 13***************
ID           :         13
N            :        679
n            :         13
H n          :         -2
```

```
Lamda_n      :    -676559  (2^-20)    -6.4521694183E-01
t lamda_n    :    1160139  (2^-5)      3.6254343750E+04
D i n        :      12276  (2^-20)     1.1707305908E-02
D T n        :   -1359867  (2^-9)     -2.6559902344E+03
D T DOTn     :         -3  (2^-14)    -1.8310546875E-04
e_n          :        692  (2^-20)     6.5994262695E-04
Omaga_n      :      22684  (2^-15)     6.9226074219E-01
tau_n        :         66  (2^-18)     2.5177001953E-04
C n          :          1
M n          :          1

       ************SATELLITE: 14***************
ID           :         14
N            :        679
n            :         14
H n          :         -7
Lamda_n      :     189709  (2^-20)     1.8092060089E-01
t lamda_n    :      17826  (2^-5)      5.5706250000E+02
D i n        :      14498  (2^-20)     1.3826370239E-02
D T n        :   -1359885  (2^-9)     -2.6560253906E+03
D T DOTn     :          1  (2^-14)     6.1035156250E-05
e_n          :       1855  (2^-20)     1.7690658569E-03
Omaga_n      :      29732  (2^-15)     9.0734863281E-01
tau_n        :          5  (2^-18)     1.9073486328E-05
C n          :          1
M n          :          1

       ************SATELLITE: 15***************
ID           :         15
N            :        679
n            :         15
H n          :          0
Lamda_n      :      62123  (2^-20)     5.9245109558E-02
t lamda_n    :     185526  (2^-5)      5.7976875000E+03
D i n        :      14489  (2^-20)     1.3817787170E-02
D T n        :   -1359839  (2^-9)     -2.6559355469E+03
D T DOTn     :          2  (2^-14)     1.2207031250E-04
e_n          :       2274  (2^-20)     2.1686553955E-03
Omaga_n      :      -1026  (2^-15)    -3.1311035156E-02
tau_n        :        -29  (2^-18)    -1.1062622070E-04
C n          :          1
M n          :          1

       ************SATELLITE: 17***************
ID           :         17
N            :        679
n            :         17
H n          :          4
```

```
Lamda_n      :     555012  (2^-20)     5.2930068970E-01
t lamda_n    :     462002  (2^-5)      1.4437562500E+04
D i n        :      10933  (2^-20)     1.0426521301E-02
D T n        :   -1359869  (2^-9)     -2.6559941406E+03
D T DOTn     :        -23  (2^-14)    -1.4038085938E-03
e_n          :       1881  (2^-20)     1.7938613892E-03
Omaga_n      :      32040  (2^-15)     9.7778320313E-01
tau_n        :         72  (2^-18)     2.7465820313E-04
C n          :          1
M n          :          1

       ************SATELLITE: 18***************
ID           :         18
N            :        679
n            :         18
H n          :         -3
Lamda_n      :     429155  (2^-20)     4.0927410126E-01
t lamda_n    :     624461  (2^-5)      1.9514406250E+04
D i n        :      10334  (2^-20)     9.8552703857E-03
D T n        :   -1359873  (2^-9)     -2.6560019531E+03
D T DOTn     :        -23  (2^-14)    -1.4038085938E-03
e_n          :       2777  (2^-20)     2.6483535767E-03
Omaga_n      :      -2544  (2^-15)    -7.7636718750E-02
tau_n        :          3  (2^-18)     1.1444091797E-05
C n          :          1
M n          :          1

       ************SATELLITE: 19***************
ID           :         19
N            :        679
n            :         19
H n          :          3
Lamda_n      :     308636  (2^-20)     2.9433822632E-01
t lamda_n    :     785742  (2^-5)      2.4554437500E+04
D i n        :      10842  (2^-20)     1.0339736938E-02
D T n        :   -1359885  (2^-9)     -2.6560253906E+03
D T DOTn     :        -24  (2^-14)    -1.4648437500E-03
e_n          :        254  (2^-20)     2.4223327637E-04
Omaga_n      :      16161  (2^-15)     4.9319458008E-01
tau_n        :         29  (2^-18)     1.1062622070E-04
C n          :          1
M n          :          1

       ************SATELLITE: 20***************
ID           :         20
N            :        679
n            :         20
H n          :          2
```

```
Lamda_n      :     183847  (2^-20)     1.7533016205E-01
t lamda_n    :     949991  (2^-5)      2.9687218750E+04
D i n        :      10920  (2^-20)     1.0414123535E-02
D T n        :   -1359858  (2^-9)     -2.6559726563E+03
D T DOTn     :        -23  (2^-14)    -1.4038085938E-03
e_n          :       1463  (2^-20)     1.3952255249E-03
Omaga_n      :         11  (2^-15)     3.3569335938E-04
tau_n        :         18  (2^-18)     6.8664550781E-05
C n          :          1
M n          :          1

        ************SATELLITE: 21***************
ID           :         21
N            :        679
n            :         21
H n          :          4
Lamda_n      :      60086  (2^-20)     5.7302474976E-02
t lamda_n    :    1109924  (2^-5)      3.4685125000E+04
D i n        :      10383  (2^-20)     9.9020004272E-03
D T n        :   -1359896  (2^-9)     -2.6560468750E+03
D T DOTn     :        -21  (2^-14)    -1.2817382813E-03
e_n          :       2206  (2^-20)     2.1038055420E-03
Omaga_n      :      30797  (2^-15)     9.3984985352E-01
tau_n        :         44  (2^-18)     1.6784667969E-04
C n          :          1
M n          :          1

        ************SATELLITE: 23***************
ID           :         23
N            :        679
n            :         23
H n          :          3
Lamda_n      :     798121  (2^-20)     7.6114749908E-01
t lamda_n    :     144221  (2^-5)      4.5069062500E+03
D i n        :      10770  (2^-20)     1.0271072388E-02
D T n        :   -1359827  (2^-9)     -2.6559121094E+03
D T DOTn     :        -28  (2^-14)    -1.7089843750E-03
e_n          :        828  (2^-20)     7.8964233398E-04
Omaga_n      :       2383  (2^-15)     7.2723388672E-02
tau_n        :          3  (2^-18)     1.1444091797E-05
C n          :          1
M n          :          1
```

C.7 Reference Ephemeris of Galileo

Reference Ephemeris of the Galileo is not specified.

C.8 Reference Almanac of Galileo

Reference Almanac of the Galileo is not specified.

C.9 Reference Ephemeris of QZSS

Reference Ephemeris of the QZSS is not specified.

C.10 Reference Almanac of QZSS

Reference Almanac of the QZSS is not specified.

C.11 Reference Ephemeris of SBAS

Reference Ephemeris of the SBAS is not specified.

C.12 Reference Almanac of SBAS

Reference Almanac of the SBAS is not specified.

C.13 List of Active Satellites

Assistance shall be provided in all GNSS tests for the satellites of the specific GNSS under test and having the following PRN numbers:

GPS: 5, 7, 10, 11, 13, 15, 17

GLONASS: 7, 8, 9, 10, 18, 19, 20

Galileo: Not specified

QZSS: Not specified

SBAS: Not specified

GPS and GLONASS satellites simulated for the GNSS Accuracy test, GNSS Sensitivity test and GNSS Moving Scenario test are listed in Table C.13-1.

Table C.13-1 GPS and GLONASS Satellites Simulated for GNSS Accuracy, GNSS Sensitivity and GNSS Moving Scenario Tests

	Satellite allocation for GPS and GLONASS constellations	
	GPS	**GLONASS**
Single constellation	5, 7, 10, 13, 15, 17	7, 8, 9, 10, 18, 19
Dual constellation (GPS + GLONASS)	7, 10, 17	8, 9, 18

Satellites of Galileo, QZSS and SBAS simulated for the GNSS Accuracy, GNSS Sensitivity and GNSS Moving Scenario tests are not specified.

GPS and GLONASS satellites simulated for the GNSS Dynamic Range test are listed in Table C.13-2.

Table C.13-2 GPS and GLONASS Satellites Simulated for GNSS Dynamic Range Test

		Satellite allocation for GPS and GLONASS constellations	
		GPS	**GLONASS**
Single constellation	High signal	7, 17	9, 19
	Low signal	5, 10, 13, 15	7, 8, 10, 18
Dual constellation (GPS + GLONASS)	High signal	7	9
	Low signal	10, 17	8, 18

Satellites of Galileo, QZSS and SBAS simulated for the GNSS Dynamic Range test are not specified.

GPS and GLONASS satellites simulated for the GNSS Multipath test are listed in Table C.13-3.

Table C.13-3 GPS and GLONASS Satellites Simulated for GNSS Multipath Test

		Satellite allocation for GPS and GLONASS constellations	
		GPS	**GLONASS**
Single constellation	LOS-only SVs	7, 17	9, 19
	SVs with LOS & Multipath	5, 10, 13, 15	7, 8, 10, 18
Dual constellation (GPS + GLONASS)	LOS-only SVs	7	9
	SVs with LOS & Multipath	10, 17	8, 18

Satellites of Galileo, QZSS and SBAS simulated for the GNSS Multipath test are not specified.

C.14 Simulated Base Station Locations

For all GNSS tests defined in this document, the simulated base station locations shall be as follows:

1. Base Station 1:
   - Lat: + 37° 22’ 00.0000”
   - Lon: - 121° 59’ 00.0000”
   - Height: + 150.00 m (above the WGS-84 Reference Ellipsoid)

2. Base Station 2:

- Lat: + 37° 19’ 39.5313”
- Lon: - 121° 57’ 18.4523”
- Height: + 150.00 m (above the WGS-84 Reference Ellipsoid)

3. Base Station 3:

- Lat: + 37° 19’ 39.5313”
- Lon: - 122° 00’ 41.5477”
- Height: + 150.00 m (above the WGS-84 Reference Ellipsoid)

C.15 Simulated Mobile Station Locations

The simulated mobile station locations shall be as follows:

1. GNSS Accuracy, GNSS Sensitivity, GNSS Dynamic Range and GNSS Multipath Tests:

- Lat: + 37° 20’ 26.3624”
- Lon: - 121° 59’ 00.00”
- Height: + 115.00 m (above the WGS-84 Reference Ellipsoid)

2. GNSS Moving Scenario Test:

The mobile station’s trajectory is a circle in the horizontal plane, with a radius of 1 km, centered at the following location:

- Lat: + 37° 22’ 00.0000”
- Lon: - 121° 59’ 00.0000”
- Height: + 115.00 m (above the WGS-84 Reference Ellipsoid)

The mobile station’s initial position at reference time (see B.2) shall be set as follows:

- Lat: + 37° 21’ 27.5630”
- Lon: - 121° 59’ 00.0000”
- Height: + 115.00 m (above the WGS-84 Reference Ellipsoid)

The mobile station’s velocity is constant at 100 km/h, with an initial heading of -90° at reference time (see C.2).

C.16 Additional GNSS Simulator Settings

The settings shown in Table C.16-1 for GPS are also applied in the GNSS simulator set-up for all GNSS testings. Note that the IODE and IODC values shown in Table C.16-1 are not mandatory. Any IODE or IODC value can be used, as long as the PDE simulator response messages are kept consistent with the settings of the GNSS simulator.

Table C.16-1 Additional GPS Settings for GNSS Simulator

SV	IODC	IODE	URA	T_{GD} (ns)	A/S Flag	Alert Flag	SV Health in Frame 25	SV Health in Valid Almanac Pages	SV Conf.
1	-	-	-	-	-	-	'111111'	-	'0010'
2	-	-	-	-	-	-	'000000'	'00000000'	'0001'
3	-	-	-	-	-	-	'000000'	'00000000'	'0001'
4	-	-	-	-	-	-	'000000'	'00000000'	'0001'
5	72	72	0	-9. 313225746	'1'	'0'	'000000'	'00000000'	'0010'
6	-	-	-	-	-	-	'000000'	'00000000'	'0001'
7	68	68	0	-10. 71020961	'1'	'0'	'000000'	'00000000'	'0010'
8	-	-	-	-	-	-	'111111'	-	'0001'
9	-	-	-	-	-	-	'000000'	'00000000'	'0001'
10	90	90	1	-2. 793967724	'1'	'0'	'000000'	'00000000'	'0001'
11	89	89	0	-11. 64153218	'1'	'0'	'000000'	'00000000'	'0001'
12	-	-	-	-	-	-	'000000'	'00000000'	'0010'
13	81	81	0	-11. 17587090	'1'	'0'	'000000'	'00000000'	'0001'
14	-	-	-	-	-	-	'000000'	'00000000'	'0001'
15	56	56	0	-9. 778887034	'1'	'0'	'000000'	'00000000'	'0010'
16	-	-	-	-	-	-	'000000'	'00000000'	'0001'
17	46	46	0	-10. 24454832	'1'	'0'	'000000'	'00000000'	'0010'
18	-	-	-	-	-	-	'000000'	'00000000'	'0001'
19	-	-	-	-	-	-	'000000'	'00000000'	'0001'
20	-	-	-	-	-	-	'000000'	'00000000'	'0001'
21	-	-	-	-	-	-	'000000'	'00000000'	'0001'
22	-	-	-	-	-	-	'000000'	'00000000'	'0001'
23	-	-	-	-	-	-	'000000'	'00000000'	'0001'
24	-	-	-	-	-	-	'111111'	-	'0001'
25	-	-	-	-	-	-	'111111'	-	'0001'

26	-	-	-	-	-	-	‘000000’	‘00000000’	‘0001’
27	-	-	-	-	-	-	‘000000’	‘00000000’	‘0001’
28	-	-	-	-	-	-	‘000000’	‘00000000’	‘0001’
29	-	-	-	-	-	-	‘000000’	‘00000000’	‘0010’
30	-	-	-	-	-	-	‘000000’	‘00000000’	‘0001’
31	-	-	-	-	-	-	‘000000’	‘00000000’	‘0010’
32	-	-	-	-	-	-	‘000000’	‘00000000’	‘0001’

Notes for Table C.16-1:

1. The interpretation of URA is as follows:

   0 : >2 m

   1 : >2.8 m

   2 : >4 m

2. The interpretation of SV Health in Frame 25 is as follows:

   ‘000000’: All Signals OK

   ‘111111’: Satellite not present

3. The interpretation of SV Health in valid Almanac frames is as follows:

   ‘00000000’: All Data and Signals OK

4. The interpretation of Satellite Configuration is as follows:

   ‘0001’: Block II/IIA/IIR satellite

   ‘0010’: Block IIR-M satellite

This page intentionally left blank.

Annex D – METHOD OF STATISTICAL CONFIDENCE DETERMINATION

This Annex is normative.

The statistical approach, proposed by FCC [6] as well as the 80% statistical value,, will be used to determine whether or not a set of measurement errors resulting from a finite set of measurements demonstrate a specified accuracy with a specified confidence. Other equivalent methods can also be used to demonstrate such accuracy.

D.1 Description of the Confidence Determination Method

A method for determining whether or not a set of location errors resulting from empirical testing demonstrates compliance may be obtained from order statistics. Confidence intervals for a specified accuracy may be selected based on a certain confidence level (for example, 90% for FCC) and the number of samples. These confidence intervals are not based on any knowledge of the actual probability distribution function of the location errors. They are expressed in terms of the subscripts of the list of location errors after ordering these errors from smallest to largest. A specific set of accuracy measurements is said to show compliance if the confidence intervals contain the location error thresholds that may be specified by a Standards Development Organization. For example, the error thresholds are 100 meters for 67% and 300 meters for 95% for network-based solutions, or 50 meters and 150 meters, respectively for handset-based solutions, as specified by the FCC ruling [24].

In general, when the number of measurements is n, the rth and s^{th} largest measurements are x_r and y_s respectively, and x and y are the percentile points associated with probabilities p_1 and p_2 respectively, then the probability that x is less than x_r while simultaneously y is less than y_s is given by the formula

$$Confidence(x \le x_r,\, y \le y_s;\, n,\, r,\, s,\, p_1,\, p_2) = \sum_{i=0}^{r-1} \sum_{j=i}^{s-1} \binom{n}{i} \binom{n-i}{n-j} p_1^i (p_2 - p_1)^{j-i} (1 - p_2)^{n-j}.$$

For example, p_1 is 0.67, and p_2 is 0.95 for the FCC ruling [5, 6]. Additionally, p_1 is 0.67, and p_2 is 0.8 for the pseudorange measurement in the GNSS Dynamic Range Test in 3.

Upper bounds on the percentile points can be determined from this expression by finding pairs of values (r, s) such that the desired 90% confidence level is achieved. Using the 67% and 95% numbers in FCC ruling as an example, the resulting pair of ordered samples (x_r, y_s) forms one-sided confidence intervals for the two sample percentile points associated with 67% and 95%, respectively (see Table D.1-1). The rth sample x_r and s^{th} sample y_s of n location errors are then compared with 100 meters and 300 meters for the networked-based solutions or with 50 meters and 150 meters for the handset-based solutions. If the rth ordered sample is less than 100 meters and the sth ordered sample is less than 300 meters, then the confidence intervals are found to cover the desired values and compliance would be established, for networked-based solutions. A similar approach would establish compliance for a set of location errors obtained from a test of a handset-based solution.

The confidence level of 90% is suggested here as a threshold, and the value calculated from the actual data may be greater. Table D.1-1 is derived from the above confidence expression and shows for several sample sizes which ordered samples of errors should be compared with the FCC criteria. For higher numbers of sample sizes such as 500 or 1000, the confidence expression should be re-calculated with the higher value of n.

Confidence in the compliance assessment is important and will depend on randomness and independence in the selection of test locations. Reports of compliance testing should describe the method used to guarantee random and independent accuracy measurements.

Table D.1-1 Identification of Location Error Samples for Comparison with FCC Required Thresholds of 67% and 95% (at the 90% Confidence Level)

Sample Size	Pairs of Test Samples	
	45	(x_{40}, y_{45})
	50	(x_{41}, y_{50})
	55	(x_{44}, y_{55})
	60	(x_{47}, y_{60})
	65	(x_{50}, y_{65})
	70	(x_{53}, y_{70})
	75	(x_{57}, y_{75})
	80	(x_{60}, y_{80}) or (x_{63}, y_{79})
	85	(x_{64}, y_{85}) or (x_{66}, y_{84})
	90	(x_{67}, y_{90}) or (x_{68}, y_{89})
	95	(x_{71}, y_{95}) or (x_{72}, y_{94})
	100	(x_{74}, y_{100}) or (x_{75}, y_{99})

Table D.1-2 shows the corresponding test samples with thresholds of 67% and 80% at 90% confidence level that can be used for the pseudorange measurement in the GNSS Dynamic Range Test in 3.1.1.2. For higher numbers of sample sizes such as 500 or 1000, the confidence expression should be re-calculated with the higher value of n.

Table D.1-2 Identification of Location Error Samples With Thresholds of 67% and 80% (at the 90% Confidence Level)

Sample Size	Pairs of Test Samples	
	45	(x_{35}, y_{41}) or (x_{37}, y_{40})
	50	(x_{39}, y_{45})

55	(x_{42}, y_{50}) or (x_{43}, y_{49})
60	(x_{46}, y_{54}) or (x_{47}, y_{53})
65	(x_{49}, y_{59}) or (x_{50}, y_{58}) or (x_{51}, y_{57})
70	(x_{53}, y_{62}) or (x_{55}, y_{61})
75	(x_{56}, y_{68}) or (x_{57}, y_{66}) or (x_{59}, y_{65})
80	(x_{60}, y_{71}) or (x_{61}, y_{70})
85	(x_{63}, y_{78}) or (x_{64}, y_{74})
90	(x_{67}, y_{79}) or (x_{68}, y_{78})
95	(x_{70}, y_{87}) or (x_{71}, y_{83}) or (x_{72}, y_{82})
100	(x_{74}, y_{88}) or (x_{75}, y_{87}) or (x_{76}, y_{86})

D.2 Evaluation Example

In the following, an example is given for the 67% and 95% statistical values. A handset-based solution would be found in compliance, if, in a test of 75 accuracy measurements, the 57th largest location error is less that 50 meters and the 75th largest error is less than 150 meters. Note that for larger sample sizes the pair of test samples is not unique, because of the statistical dependence of the 67% and 95% levels. For example, for a sample size of 80, two pairs are shown; the 67% level could be increased from the 60th to the 63rd sample, (i.e., made more difficult), if the 95% level test were relaxed to the 79th largest sample. Either (x_{60}, y_{80}) or (x_{63}, y_{79}) is an acceptable pair to test against the FCC-required thresholds.

This page intentionally left blank.

Annex E PDE SIMULATOR RESPONSE MESSAGES

This Annex is normative.

The PDE simulator response messages are included in the attached files.

1. Annex D Acquisition.txt 636 KB 01/21/2002
2. Annex D Almanac.txt 2 KB 01/21/2002
3. Annex D BSAlmanac.txt 1 KB 01/21/2002
4. Annex D BSCapabilities.txt 1 KB 01/21/2002
5. Annex D Ephemeris.txt 2 KB 01/21/2002
6. Annex D Location.txt 178 KB 01/21/2002
7. Annex D Sensitivity.txt 5,332 KB 01/21/2002

The PDE simulator response messages presented in this Annex assume the pilot phase offset assignment shown in Table E.1. This assignment must be changed and the corresponding PDE simulator response message field values corrected accordingly if the test equipment used in the tests is configured with a different pilot phase offset assignment.

Table E.1 Pilot PN Offset and BASE_ID Assignment Used in the PDE Simulator Response Messages

Pilot PN Offset	Numerical Value (in units of 64 CDMA Chips)	BASE_ID (Decimal)
P_0	0	0
P_1	1	4
P_2	2	5
P_3	3	3
P_4	4	1
P_5	5	2
P_6	6	6
P_7	7	7
P_8	8	8
P_9	9	9

This page intentionally left blank.